Sofa Table • Stacking Storage Boxes • Redwood Planters • Magazine Boxes • Full-Length Mirror

Woodsmith®

Vol. 18 / No. 104

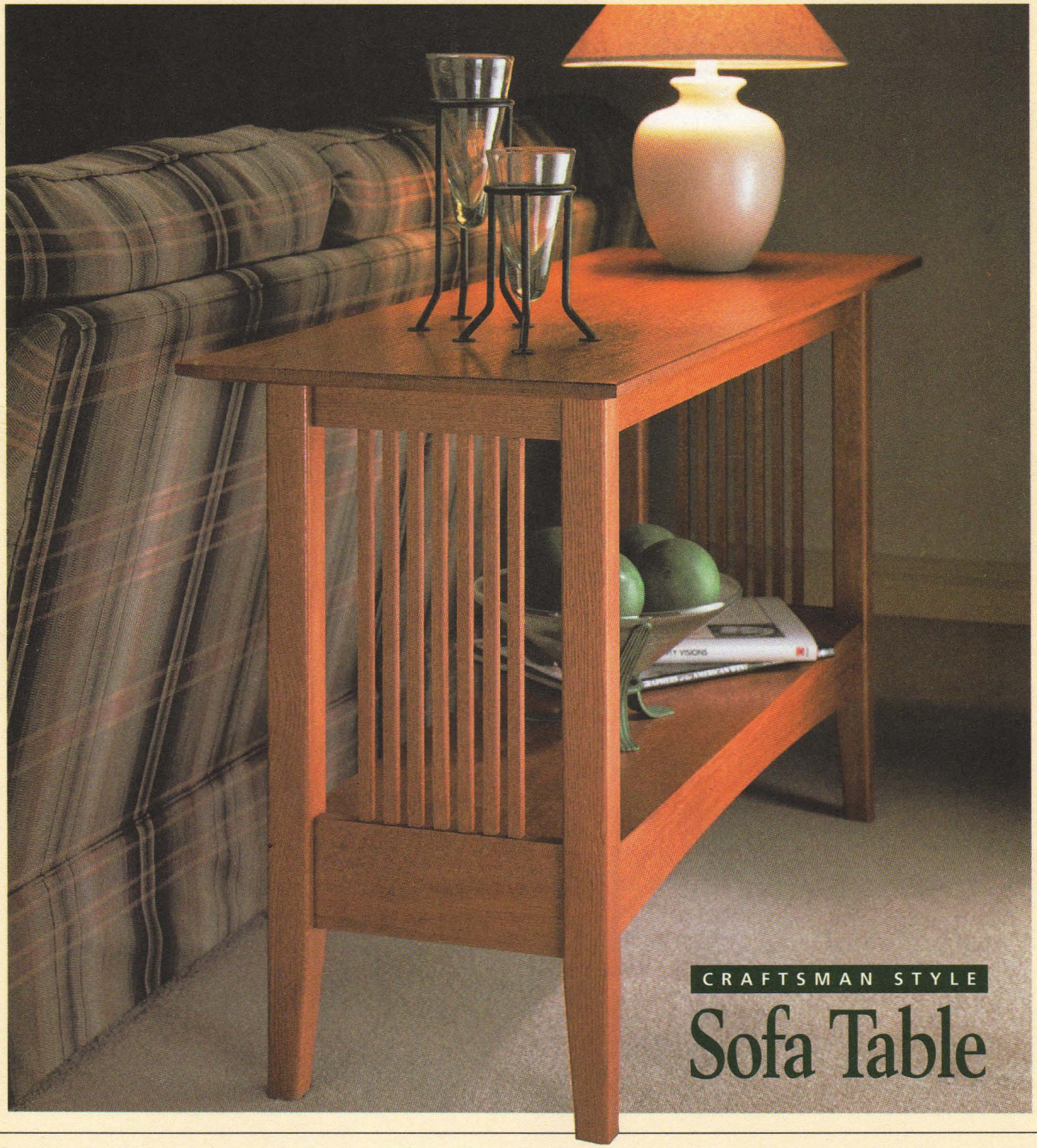

CRAFTSMAN STYLE

Sofa Table

Woodsmith

No. 104 April, 1996

Publisher Donald B. Peschke
Editor Terry J. Strohman
Associate Editors Jon Garbison, Mark Williams
Contributing Editor Vincent S. Ancona
Art Director Todd Lambirth
Senior Illustrators David Kreyling, Dirk Ver Steeg
Illustrator Erich Lage

CREATIVE RESOURCES

Creative Director: Ted Kralicek • *Executive Editor:* Douglas L. Hicks • *Project Design Director:* Ken Munkel • *Senior Project Designer:* Kent Welsh • *Shop Manager:* Steve Curtis • *Shop Craftsman:* Steve Johnson • *Senior Photographer:* Crayola England • *Electronic Comunications Coord.:* Gordon C. Gaippe • *Assoc. Graphic Design Director:* Susie Rider • *Senior Graphic Designer:* Chris Glowacki • *Graphic Designer:* Cheryl L. Cynor

CIRCULATION

Circulation Director: Susan Du Bois • *Assistant Circulation Director:* Troy J. Dowell • *Subscription Manager:* Sandy Baum • *Renewal Manager:* Paige Rogers • *Assistant Direct Mail Manager:* Julie Greenlee • *Newsstand Manager:* Kent A. Buckton

CORPORATE SERVICES

Vice President of Planning and Finance: Jon Macarthy • *Controller:* Robin Hutchinson *Sr. Account.:* Laura Thomas • *Accounts Payable:* Holly Lucas • *Production Dir.:* George Chmielarz • *Electronic Publishing:* Douglas M. Lidster • *Production Artist:* Jon Snyder • *Production Mgr.:* Carol Quijano • *Network Admin.:* Al Barnes • *Prof. Development Dir.:* Joyce Moore • *Admin. Assistants:* Cheryl A. Lee, Julia Fish • *Receptionist:* Jeanne Johnson • *Building Maint.:* Ken Griffith

WOODSMITH MAIL ORDER

Operations Director: Bob Baker • *Art Dir.:* Cindy Scarpino • *Materials Manager:* Mark Mattiussi • *Customer Service Mgr.:* Jennie Enos • *Warehouse Supr.:* Nancy Johnson • *Buyer:* Linda Jones • *Systems Operator:* Tammy Aldini • *Team Leader:* Karla Cronin • *Tech. Support:* Dave Stone • *Cust. Serv. Reps.:* Jennifer Murphy, Joy Krause, Sara Kono, Anna Cox, Adam Best, Kristi Andrews, Margo Petrus • *Warehouse:* Gloria Sheehan, Chuck Carlson, Sylvia Carey, Larry Prine, Scott Gilliam, Cathy Steiner

WOODSMITH STORE

Manager: Dave Larson • *Assistant Manager:* Paul Schneider • *Sales Staff:* Pat Lowry, Jerome Herr • *Office Manager:* Vicki Edwards

Woodsmith® (ISSN 0164-4114) is published bimonthly (Feb., Apr., June, Aug., Oct., Dec.) by August Home Publishing Company, 2200 Grand, Des Moines, IA 50312.

Woodsmith® is a registered trademark of August Home Publishing. **Copyright©** 1996 August Home Publishing Company. All rights reserved.

Subscriptions: Single copy: $4.99. One year subscription (6 issues), $19.95. Two years (12 issues), $35.95. (Canada/Foreign add $5 per year, U.S. funds.)
Second Class Postage Paid at Des Moines, IA and at additional offices.
Postmaster: Send change of address to *Woodsmith*, Box 10718, Des Moines, IA 50350.
Subscription Questions? Call 1-800-333-5075, 8:00 am to 5:00 pm, Central Time, weekdays.
E-Mail: augusthome@aol.com
World Wide Web: http://www.augusthome.com

Printed in U.S.A.

EDITOR'S COLUMN

SAWDUST

The first thing I want to talk about is the last issue of *Woodsmith*. As many of you know, we went through some rather extensive changes in Issue No. 103. I'm really pleased with the new look. And judging from most of the comments I've received, so are many of you. However, as often happens when trying something new, we ran into an unforeseen problem.

MISPRINT. In *Woodsmith* No. 103 the text on page 8 was inadvertently duplicated on page 9. We've tracked down the source of the problem and have taken steps to prevent it from happening in the future. But that really doesn't help much if you want to build the roll-top desk featured on that page.

So I decided to do something to help those woodworkers who are building the desk. (And those who might want to build it in the future.)

In this issue there's a corrected version of page 9 from last issue with page 10 also printed on the back. So all you have to do is remove the correction page from this issue and insert it in Issue No. 103.

Note: The correction page should be bound into this issue, if it's missing, write or call our customer service department (see lower left), and they'll be glad to send one right out to you.

I apologize for any inconvenience this may have caused you.

WEB SITE. But running into one problem doesn't mean we are going to stop trying new things. I'm pleased to announce that we now have an Internet web site up and running.

A web site is like having a key to our front door. (You can come in and look around whenever you like.)

This site is on the World Wide Web, and anyone that has access to the Internet and a web browser can get on line and visit us.

Our URL (web address) is: **http://www.augusthome.com**

Once you're in the site, some of the things you'll find are tips from *Woodsmith* and *ShopNotes* magazines. Also, there are special offers from the *WoodsmithShop* catalog and The Woodsmith Store. There's even a list of current job openings here at August Home Publishing.

HELP WANTED. Speaking of job openings, we're looking for someone to join our design staff. Candidates should have a strong woodworking background, with proven design and technical drawing experience.

If you're interested in this position, please send a resume along with a letter explaining your qualifications to: J.W. Moore, 2200 Grand Ave., Des Moines, IA 50312.

NEW FACES. While I'm on the subject of jobs, we've had a couple of additions to our extended family. First, Jerome Herr has joined the sales staff at the Woodsmith Store.

The other new face around here is Alan Barnes, our Network Administrator. His job is to take care of our computer and software needs, which means he will be very busy.

Terry

A LOOK INSIDE

CONTENTS

Features

Sofa Table 6

This table has many features typical of craftsman-style furniture: quartersawn oak, square spindles, and mortise and tenon joinery.

Stacking Storage Boxes 14

Three boxes, all exactly the same size, are designed to save space by stacking one on top of the other. Box joints hold the pieces together, and an interesting paneled lid caps off the project.

Magazine Boxes 18

A space saving way to store magazines is upright on the shelf. Built with box joints, these old-fashioned looking magazine boxes hold and protect your prized issues.

Redwood Planters 20

Looking for a quick and easy weekend project? Try building these planter boxes. This box joint project makes an attractive addition to a deck or patio.

Box Joints 22

Here's a step-by-step look at building with box joints. A table saw, miter gauge, and a quick shop-built jig are all you'll need.

Full-Length Mirror 26

This unique, free standing mirror features simple lap joints and an arched top built in segments. It also folds flat on a hinged stand to be hung up out of the way.

Segmented Arch 32

The way to build arches is to avoid a weak cross grain joint. We show you how to do this by using several pieces and reinforce the joints with splines.

Departments

Tips & Techniques 4

Shop Notes 12

Reader's Jig 34

Sources 35

Sofa Table *page 6*

Stacking Storage Boxes *page 14*

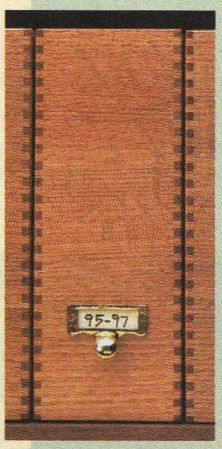

Magazine Boxes *page 18*

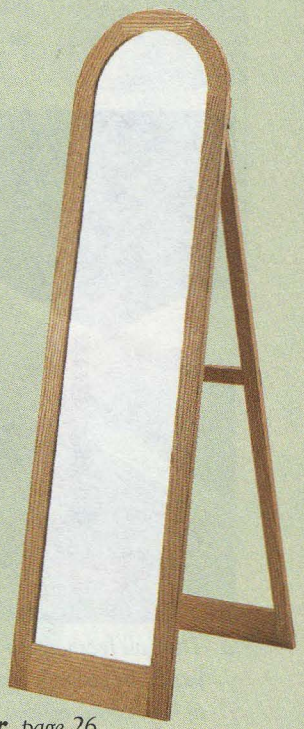

Full-Length Mirror *page 26*

TIPS & TECHNIQUES

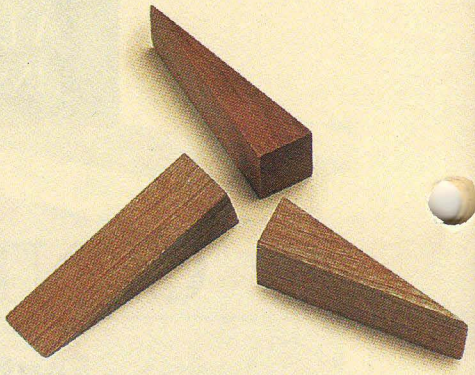

Band Saw Wedge Jig

Here's a quick and easy way to cut wedges on a band saw so they're all the same size and shape. I use a carrier board with a cutout that matches the wedge shape, see Fig. 1.

Just place your stock in the cutout and slide the carrier board along the rip fence, see Fig. 2. After each wedge is cut free, flip the stock over before cutting out the next wedge.

Leroy Davison
Ida Grove, Iowa

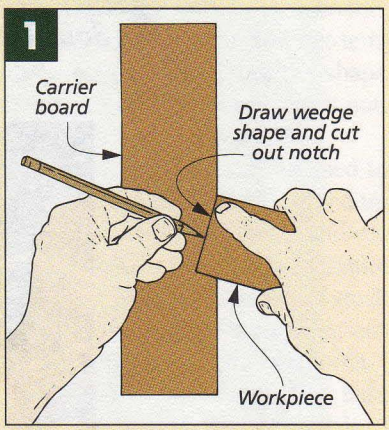

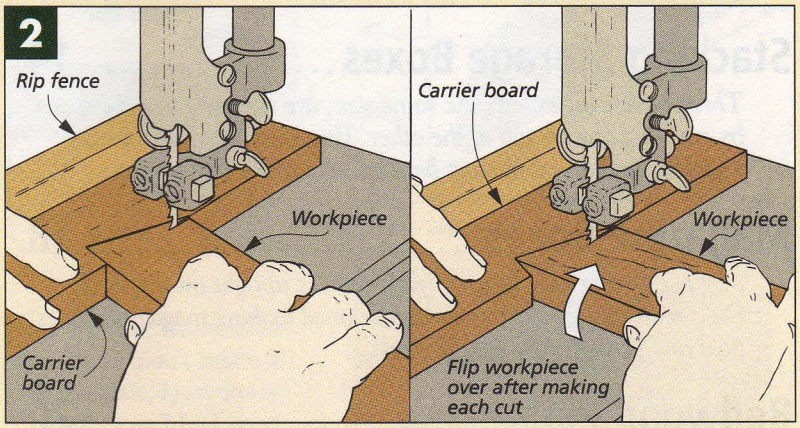

Tall Featherboard

I use a table saw when cutting grooves in the edge of a workpiece. But to keep tall pieces stable during the cut, I made a tall featherboard that applies pressure to the full face of the board.

My design is a little unusual and doesn't look like a traditional featherboard. That's because I use a piece of hardboard that acts like a spring to apply the pressure, see Fig. 1.

This hardboard fits snug in an angled saw kerf cut in a L-shaped block. Yet it's easy to adjust for different stock sizes.

The block is attached to a runner that fits in the miter guage slot of the table saw. Instead of using clamps to hold the featherboard in position, the runner expands when a pair of wing nuts are tightened, see Fig. 1a. This wedges the runner in the slot so the featherboard won't move.

Gale Ramerman
Bellingham, Washington

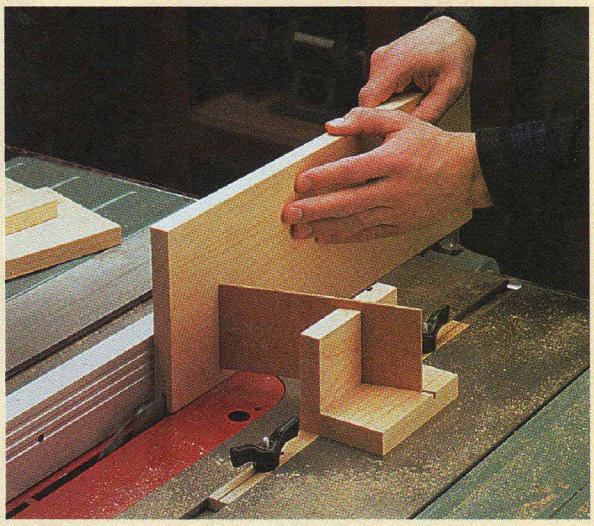

▲ *This tall featherboard slides in the miter slot and is locked in position by tightening the wing nuts. A piece of hardboard is used to apply pressure to the workpiece.*

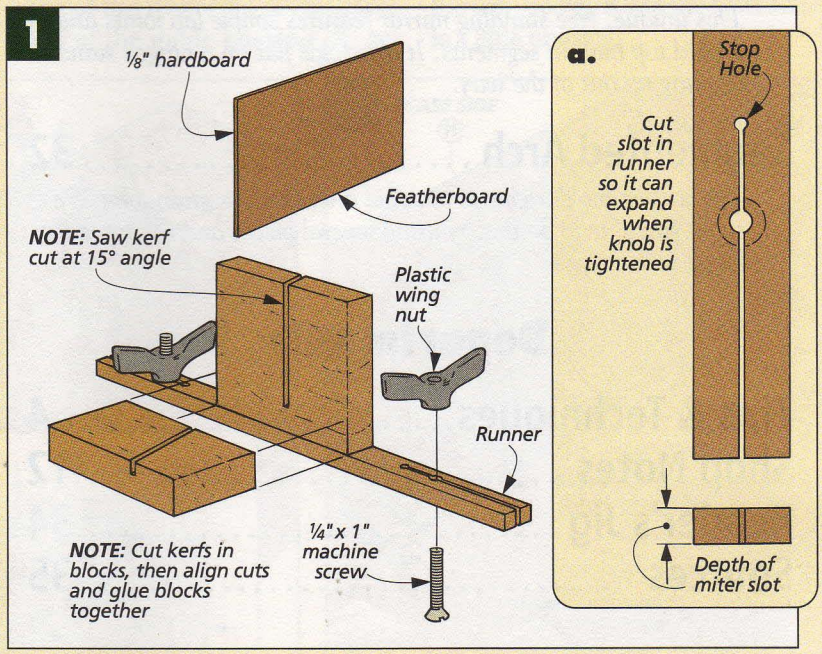

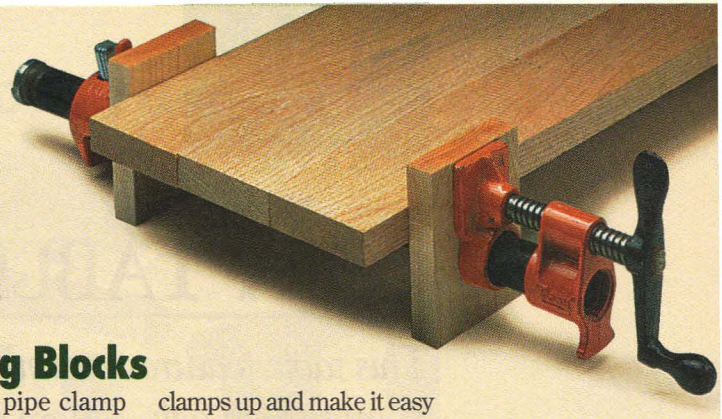

Locating Magnetic Catches

Sometimes it can be difficult to get the strike plate and the magnetic catch aligned on a cabinet door. But I've found a quick way to do this using an ordinary household thumbtack.

Just center the thumbtack on the magnet and close the cabinet door. The point on the thumbtack leaves a small hole in the door frame. Now it's easy to center the strike plate over this hole for a perfect installation.

B. J. Gantert
Philadelphia, Pennsylvania

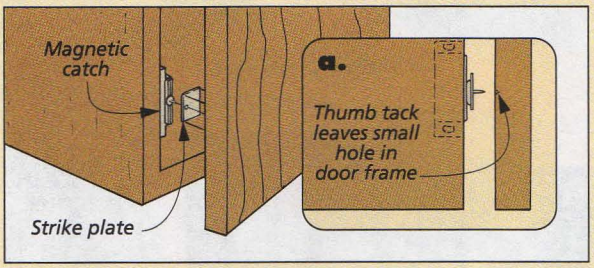

Clamping Blocks

Tightening a pipe clamp can be a real "knuckle buster" when it sits on the workbench. So I made a couple ¾"-thick wood spacer blocks to raise the clamps up and make it easy to turn the handle. They also act as clamp pads to protect your workpiece.

Walter Neu
Naples, Idaho

Suspended Extension Cords

Getting electrical power to your workbench in the center of the shop can be a problem. A drop cord works, but you risk tripping over it or even cutting the cord. So I raise the cord up off the floor and protect it in plastic electrical conduit.

The drop cord runs inside the conduit from the outlet to your workbench. Note: You'll have to remove the plug or receptical end first so the cord can be pulled through the conduit.

Nick Cicora
Roswell, Georgia

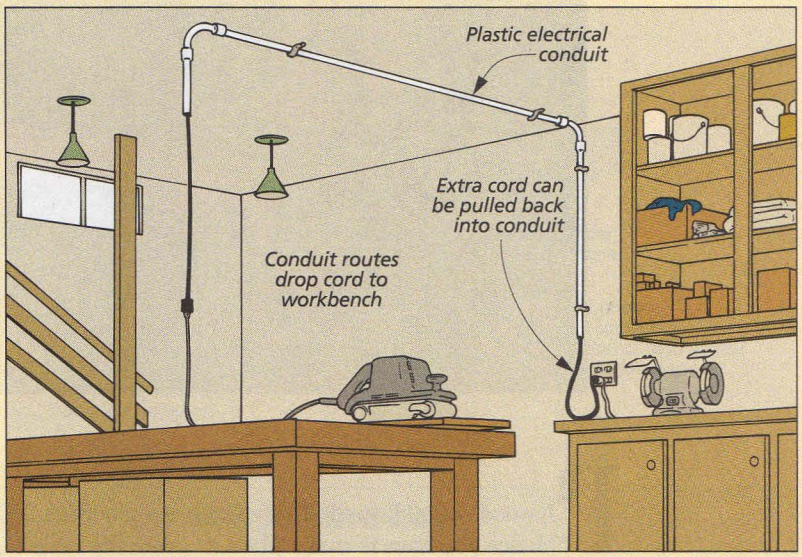

Strengthening Threads

One way to strengthen wooden threads and make them wear longer is to apply a thin coat of quick-set epoxy to the threads. To do this, put epoxy in the hole, screw in a bolt, and then remove it. The bolt spreads the epoxy evenly to all of the threads.

Walter Diedrick
Edgerton, Wisconsin

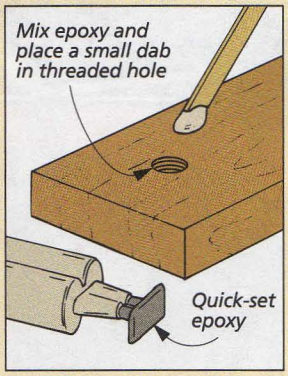

Quick Tips

BURN MARKS

It's easier to remove burn marks from cherry or maple if you apply mineral spirits to the mark before sanding. The solvent penetrates the glazed area, and after a few minutes, you can sand it off easily.

Stan Kasieta
Ironwood, Michigan

GETTING A GRIP

To keep a good grip on your hammer or screwdriver, try storing a rosin bag (like baseball pitchers use) in your tool belt. They're available at sporting goods stores for only a few dollars.

R. B. Himes
Vienna, Ohio

GLUE VACUUM

Excess glue squeeze-out can really make a mess. So I "vacuum" up the glue with an empty plastic bottle. Just squeeze the bottle and let it suck up the glue as you run it along the joint line.

Stanley T. Johnson
Des Moines, Iowa

SUBMIT YOUR TIPS

If you would like to share an *original* shop-tested tip, send it to: *Woodsmith*, Tips and Techniques, 2200 Grand Avenue, Des Moines, Iowa 50312. Or if it's easier, FAX it to us at: 515-282-6741. Or use our E-Mail: 75330,2301@compuserve.com.

If published, you'll receive $30 to $150, depending on the published length. Include a brief explanation and sketch or photo. And don't worry, we'll rewrite the tip and redraw the art, if necessary. Also, *please* include a daytime phone number.

SOFA TABLE

This table features everything you'd expect of a craftsman-style table: quartersawn oak, square spindles, and mortise and tenon joinery.

Plywood or solid wood? That's the choice you have to make when a project includes a wide panel. Often, I'll choose plywood since it doesn't expand and contract with changes in humidity as much as solid wood.

But I decided against using plywood on this project for a couple reasons. For one thing, quartersawn oak is hard to find in plywood. And beveling the top edge wouldn't work without framing the edges with hardwood.

Since solid wood was the only option for the panels, I had to come up with a way to allow them to expand and contract. This wasn't a problem with the table top. I used some simple Z-shaped fasteners, see the Table Top Detail on page 7.

I was also able to use these fasteners on the front and back of the shelf. But the ends were a little more work.

The problem here is that the shelf fits between the legs. So when the panel expands, it will tend to push the legs apart, and when it contracts, there will be a gap. To solve this problem, I made a pocket for the shelf by extending the groove on the rails into the legs, see the photo at right.

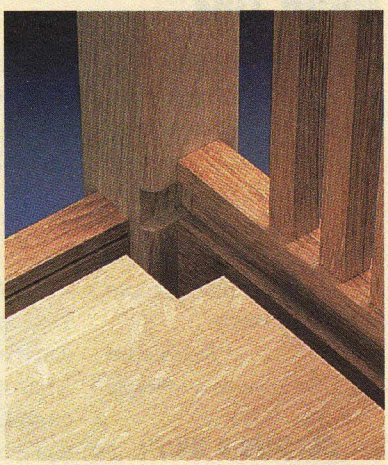

▲ *Housing the shelf between the legs requires "extending" the groove in the rails into the legs.*

Construction Details

OVERALL DIMENSIONS:
50"L x 28"H x 17"W

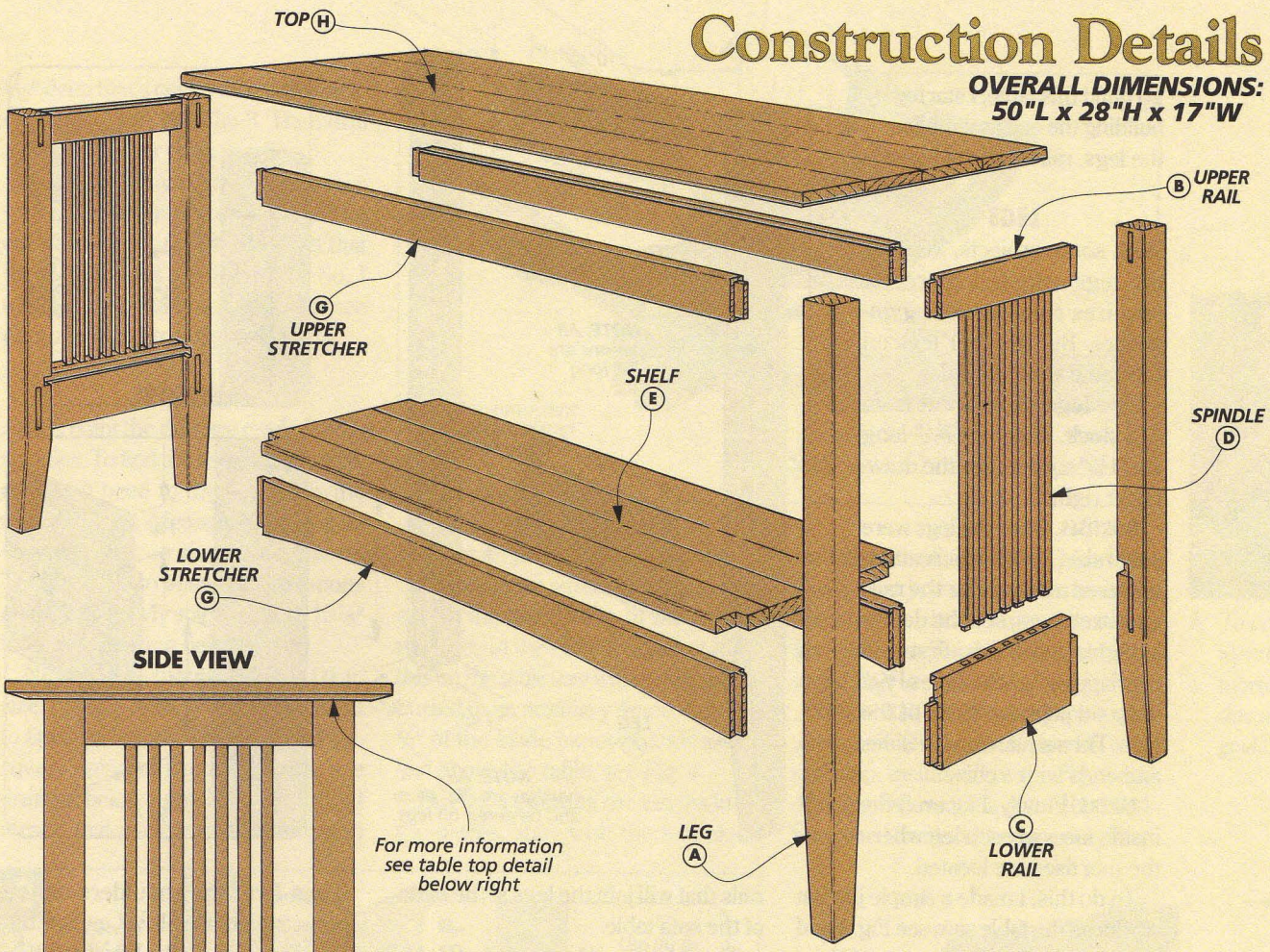

SIDE VIEW

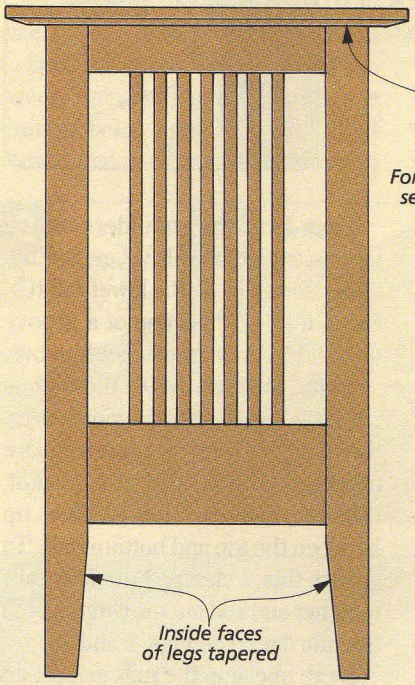

TABLE TOP DETAIL
(CROSS SECTION)

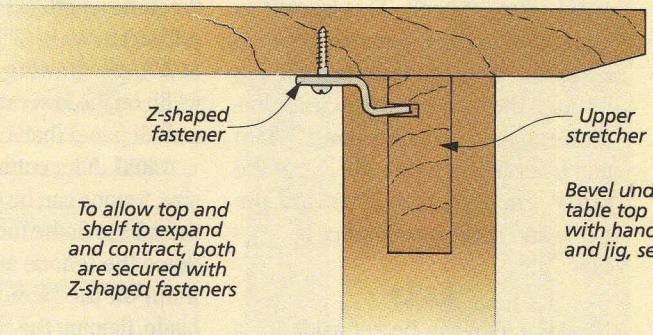

MATERIALS

Parts

A	Legs (4)	1¾ x 1¾ - 27¼
B	Upr. Rails (2)	¾ x 2 - 11¼
C	Lwr. Rails (2)	¾ x 4⅛ - 11¼
D	Spindles (14)	½ x ½ - 15⅛
E	Shelf (1)	¾ x 12¾ - 40
F	Upr. Stretchers (2)	¾ x 2 - 39¾
G	Lwr. Stretchers (2)	¾ x 3 - 39¾
H	Top (1)	¾ x 17 - 50

Hardware

- (16) Z-shaped Table Top Fasteners
- (16) #8 x ⅝" Rh Woodscrews

CUTTING DIAGRAM

1¾" x 4" x 60" Quartersawn White Oak (3.3 Bd. Ft.)

¾" x 4" x 84" Quartersawn White Oak (2 boards @ 2.3 Bd. Ft. ea.)

¾" x 5" x 96" Quartersawn White Oak (2 boards @ 3.3 Bd. Ft. ea.)

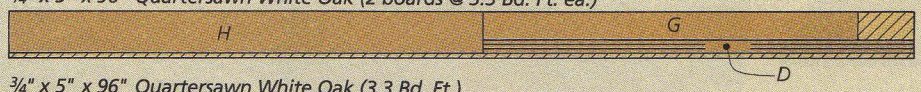

¾" x 5" x 96" Quartersawn White Oak (3.3 Bd. Ft.)

¾" x 5" x 96" Quartersawn White Oak (3.3 Bd. Ft.)

To build this table, I started by building the end assemblies — the legs, rails, and spindles.

LEGS

With some projects, keeping the legs oriented correctly requires some mental gymnastics. But the four legs on this table are identical.

The **legs (A)** are cut from 8/4 stock. They're 27¼" long and 1¾" square, see the drawing at right.

MORTISES. Once the legs were cut to size, I worked on cutting centered mortises for the rails and stretchers, see the details at right. To do this, first drill overlapping ¼"-dia. holes 11/16" deep on adjacent faces of the legs. Then square up the sides and ends with a chisel.

TAPERS. Finally, I tapered the inside faces of each leg where the mortises are located.

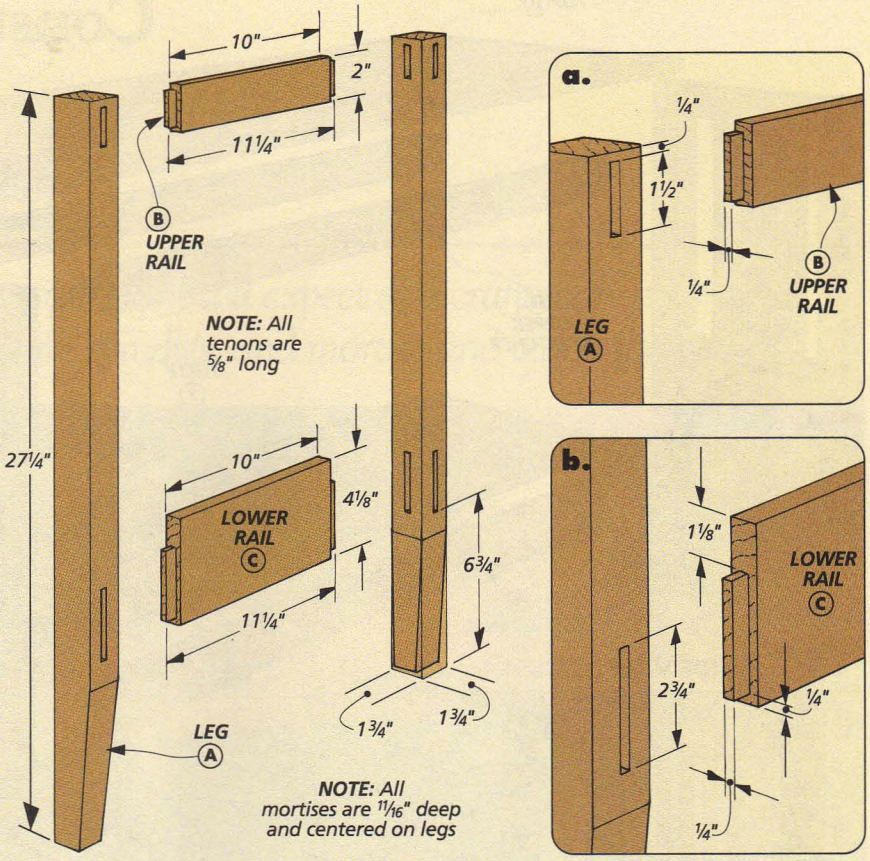

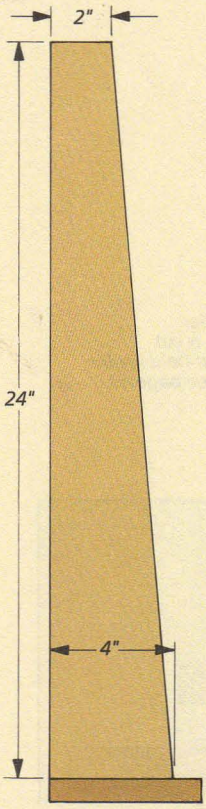

▲ *This taper jig is just an angled piece of plywood with a cleat screwed to the front.*

To do this, I made a simple jig that works on the table saw, see Fig. 1 and drawing at left. It's just a scrap piece with a tapered edge and a small cleat attached to one end. This jig acts as an angled spacer between the rip fence and the leg. You push the leg through the blade, and the cleat causes the jig to simply ride along. When one taper is cut, rotate the leg so the other mortised face is toward the blade and make a second pass.

RAILS

Now the legs can be set aside for a minute and work can begin on the rails that will join the legs at the ends of the sofa table.

The **upper** and **lower rails (B, C)** are cut from ¾"-thick stock and are the same length (11¼"). But the upper rail isn't as wide (2") as the lower one (4⅛"), see drawing above. The extra width on the lower rail allows room for a shelf panel that's added later.

TENONS. After cutting the rails to final size, tenons can be cut on the ends of the rails to fit the mortises in the legs. Since the tenons are centered, I cut them on the table saw with a dado blade, flipping the rails between passes to sneak up on the final thickness.

Then I cut the shoulders on the tenons, which are all ¼" except the upper shoulder on the lower rail (C). Here, it's 1⅛" because of a groove that's added later, see detail 'b' above.

SPINDLE MORTISES. With the tenons cut, it's time to lay out the mortises for the spindles. There are seven square mortises in each rail. For a good fit, these mortises should line up between the top and bottom rails. To ensure this, I clamped the four rails together and laid out the centers of all the mortises, see Figs. 2 and 2a.

Next, unclamp the rails and set up the drill press to bore a ⅜"-dia. hole

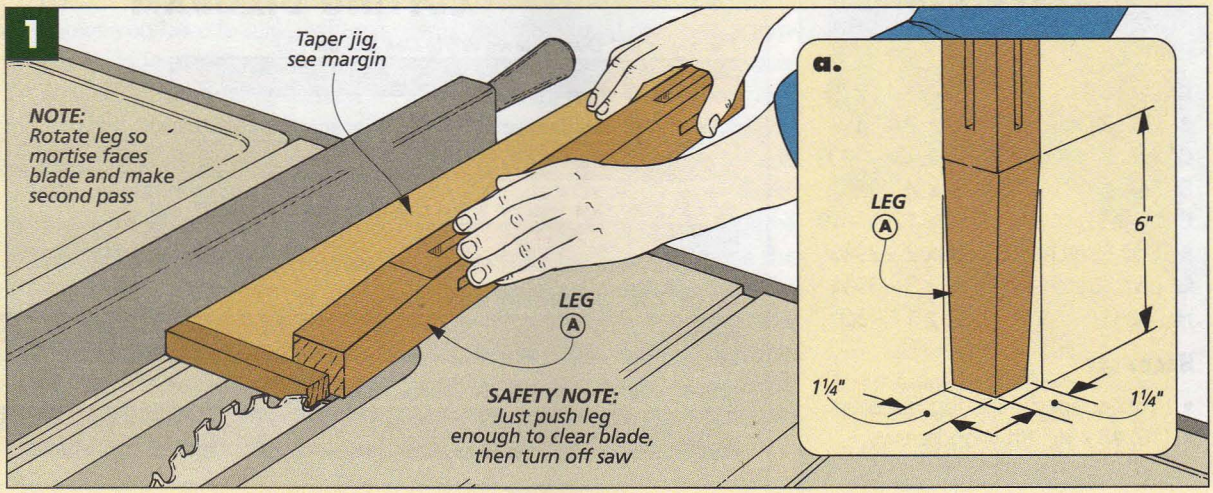

5/16" deep that's centered on the thickness of the rail, see Fig. 3. Then drill a single hole for each mortise.

Finally, I squared up the mortises with a chisel. Since the tenons will be cut with one setup, it's important that these mortises are identical. So, I made a shop-made squaring jig, see photo in margin at right.

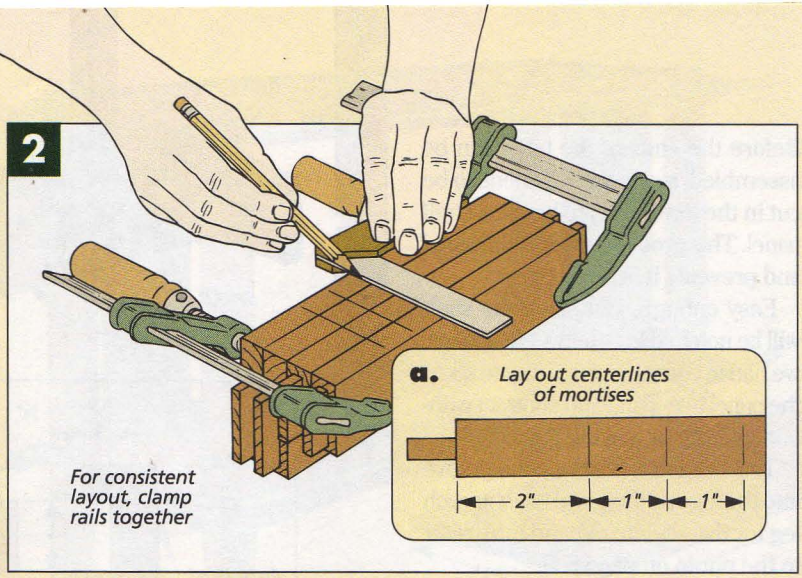

▲ *To end up with identical, square mortises, I made this simple chisel guide, see page 12.*

SPINDLES

At this point the rails are ready for the spindles. To find the length of the spindles, you need to dry assemble the rails and legs. Measure for the spindles' shoulder to shoulder distance. Then add 1/2" to allow for the tenons on each end. (My spindles were 15 1/8" long, see drawing below right.)

Next, to cut the **spindles (D)** to size, I began with 1/2"-thick stock cut to finished length. Then I ripped 1/2"-square spindles from the blank, see drawing below right. Note: It's a good idea to make a few extra spindles to help set up the cut for the tenons.

TENONS. Now, square tenons can be cut on the spindles to fit the square mortises in the rails. It's easiest to do this on the table saw with a dado blade buried in an auxiliary fence. Leave a 1/4" of the blade exposed and raise it 1/16" above the table, see Fig. 4.

But before cutting the tenons in all the pieces, start with the test piece and check the fit carefully. This means more than just setting the tenon in the mortise. It also means making sure the spindles will fit between the upper and lower rails.

KERF IN RAIL. Now to complete the upper rails (B), I cut a 1/8" kerf in each rail's top, inside edge, see Fig. 5 and drawing below. This is for the hardware used to attach the top panel later.

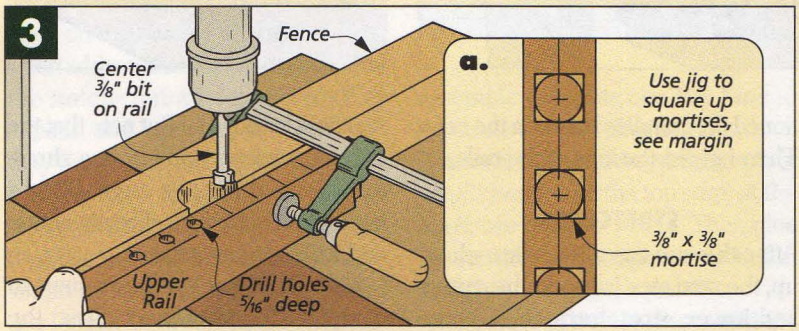

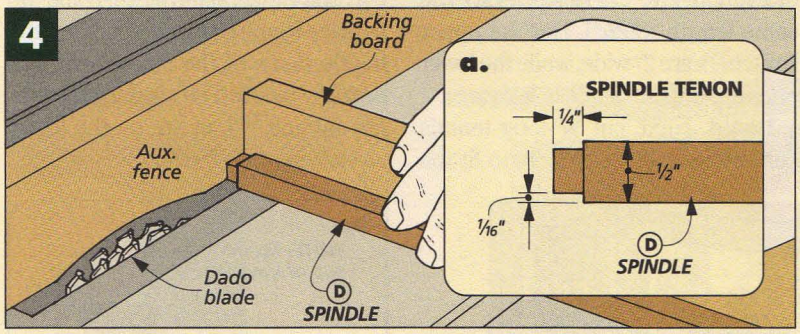

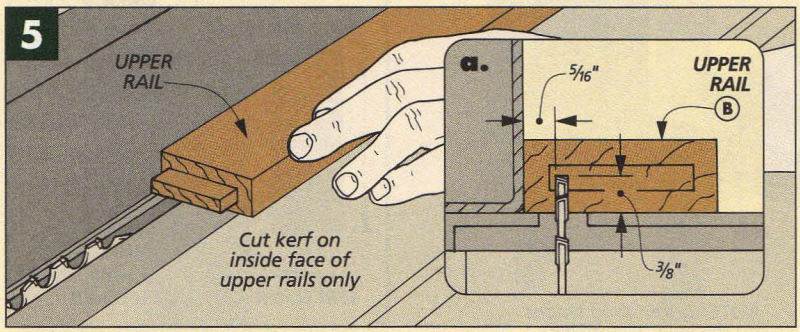

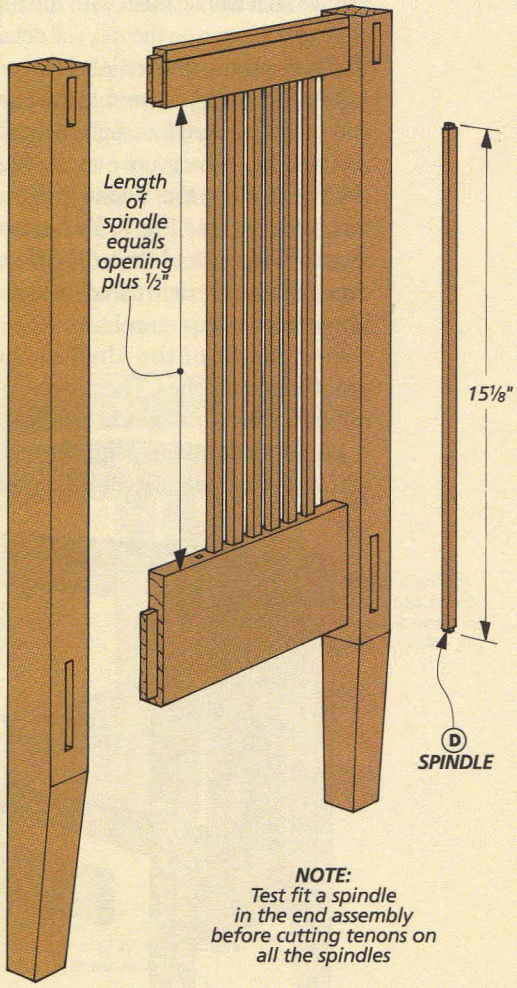

Before the ends of the table can be assembled, a groove still needs to be cut in the lower rails to house a shelf panel. This groove supports the panel and prevents it from cupping.

Easy enough. But since the shelf will be notched to fit between the legs, we had to come up with a way to allow the panel to expand and contract without splitting or leaving gaps.

The solution is to extend the groove into the legs so there's a notch in each leg for the shelf to expand into, refer to the photo on page 6.

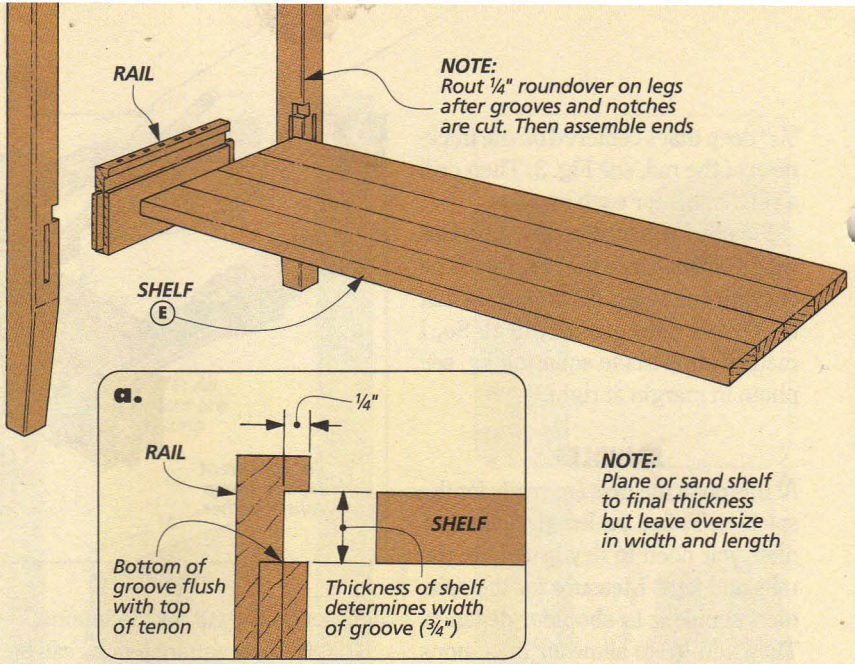

SHELF JOINERY

Creating the groove for the shelf isn't difficult. But since the **shelf (E)** determines the width of the grooves, I glued it up first, see drawing above. That way, I knew the final thickness of the panel after it was sanded.

GROOVE. After determining the thickness of the panel, the first step is to lay out the location of the groove in the rail. Mark the bottom edge of this groove so it will be flush with the top edge of the tenon on the rail, see detail 'a'. Then cut the groove ¼" deep.

NOTCH. Now dry assemble the legs and rails again and transfer the depth and height of the groove to the leg, see Fig. 6. When that's done, you can notch the leg, see Fig. 7. To remove most of the waste, I drilled ⅜"-deep overlapping holes and pared up to the layout lines with a chisel.

Test the fit of the shelf in the grooves and notches. Then rout a ¼" radius on all four edges of the legs.

ASSEMBLE ENDS. At this point, the ends of the table can be assembled. I positioned the spindles between the rails. Then I glued the legs to the rails.

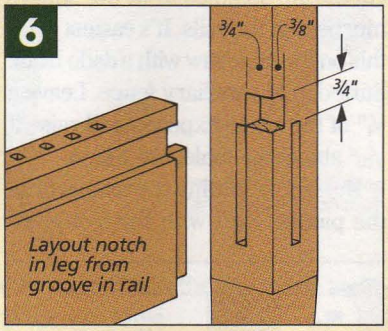

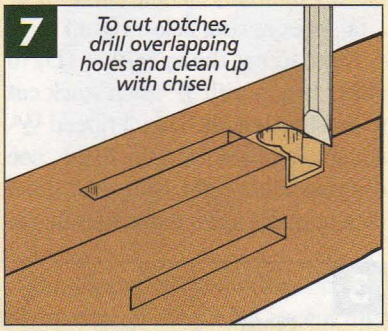

STRETCHERS

After the end assemblies are glued up, the next step is to add the **upper** and **lower stretchers (F, G)**, see drawing below. These pieces are the same length (39¾"). But the upper stretchers are 2" wide, while the lower ones are 3", see detail 'b' below.

TENONS. Next, cut ⅝"-long tenons centered on the stretchers to fit the mortises in the legs. But note that the lower stretchers don't have a shoulder along their top edge. That's because the shelf sits directly on top and will hide any gap.

KERF. There are two more steps to complete the stretchers. First, the hardware that holds the shelf and top in place requires a kerf cut along the inside faces of the stretchers, see detail 'b' below. The second step is to lay out and cut an arc on the lower stretchers, see drawing below left.

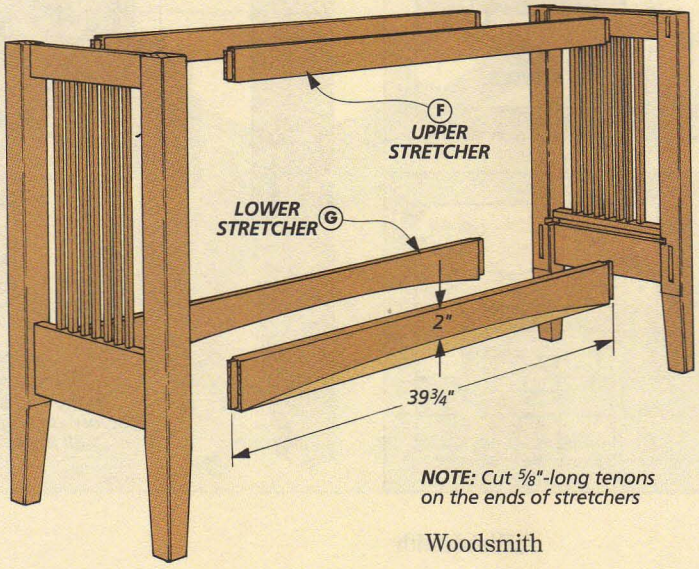

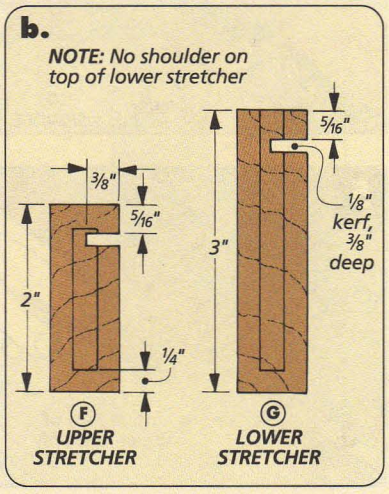

SHELF AND TOP

Before connecting the end assemblies with the stretchers, you need to cut the shelf panel to final size. To do this, you'll have to dry assemble the table again, see drawing at right.

The overall length of the shelf equals the distance between the grooves in the rails. (Mine was 40" long.) The overall width equals the distance across the stretchers plus 1/8" overhang on each side, see detail 'c'. (Mine was 12 3/4" wide.)

NOTCHES. After the shelf is cut to size, the corners need to be notched to fit around the legs (and into the notches in the legs), see detail 'd'. Finding the depth of the shelf notch is easy. Measure from the bottom of the groove in the rail to the inside edge of the leg. (Mine was 3/4".)

The width of the notch is a little more tricky. First measure from the outside edge of the stretcher to the edge of the notch in the leg (7/8"), see detail 'd' at right. Add 1/8" for the overhang on the outside of the stretcher. Then add another 1/8" for a gap inside the notch that allows the shelf to expand and contract, see detail 'd'. (My notch was 1 1/8" wide.)

Note: It's a good idea to double-check your measurements before cutting the notches on the shelf. The length between the legs should equal the length between these notches. Then once the notches are cut, dry assemble the table one last time to make sure everything fits.

ASSEMBLY. When everything fits, rout a 1/16" chamfer on the top edge of the shelf, see detail 'c' above. Then glue up the table. (But remember not to use glue on the shelf panel.)

TOP. Now all that's left is to add the **top (H)**. Glue up a 3/4"-thick panel and cut it to finished size, see drawing below. Then rout a bevel around the bottom edge, see page 13.

Finally, to attach the top (and the front and back of the shelf), I used metal Z-shaped table top fasteners, see detail 'e' below. These fit into the kerfs in the stretchers and rails and are screwed to the panels above. W

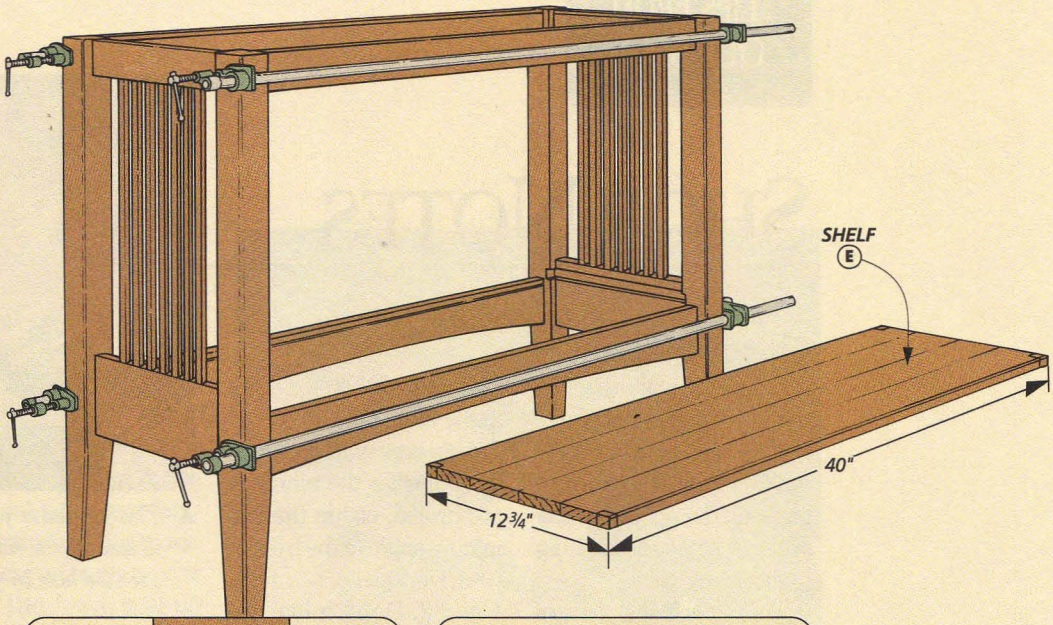

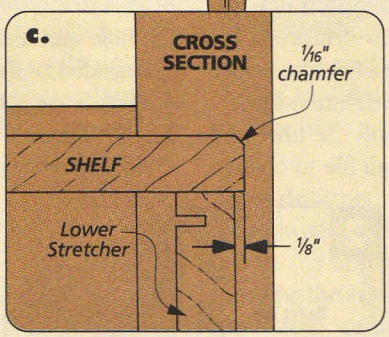

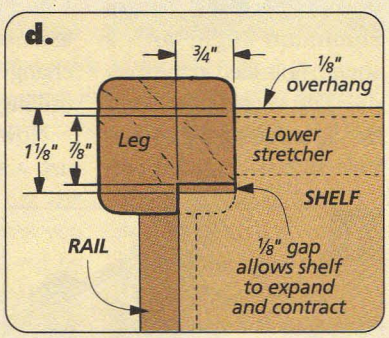

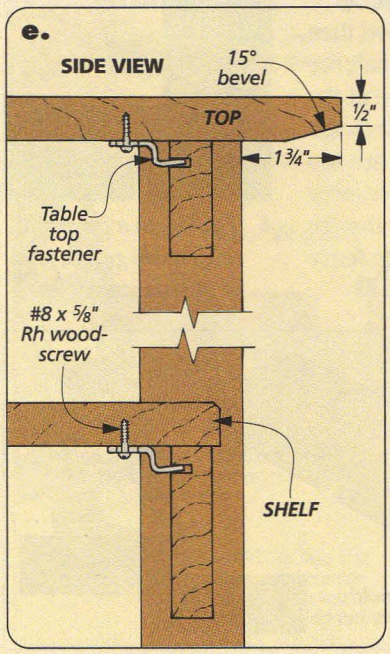

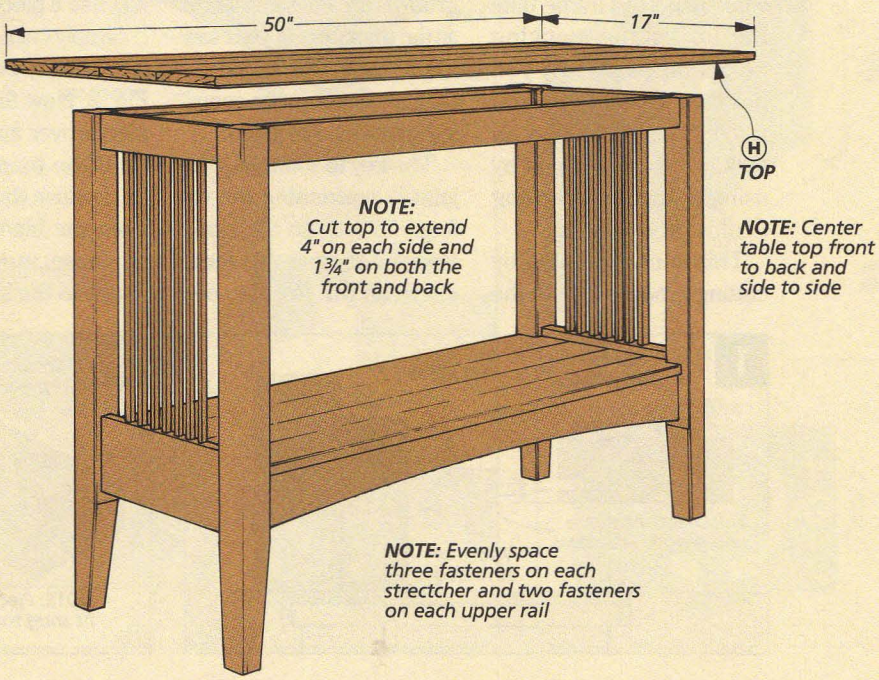

SHOP NOTES

Chisel Guide

It can be difficult to get all the holes on the sofa table rail squared up accurately for the spindles (refer to page 6). To speed up the process, I made a simple jig to guide my chisel.

This jig is just a piece of aluminum angle with a square hole filed in the middle. The secret to making this jig is cutting the square hole so it is centered perfectly over the drilled holes in the table rails.

This is easy to do. Once the holes for the mortises are drilled, clamp the aluminum angle to the front of your workpiece, see Figs. 1 and 2. Don't move the fence on the drill press, but change to a twist bit before drilling the aluminum.

Now drill the hole and use a small file to change the hole into a square the size needed for the mortise, see Fig. 3. (In my case this was 3/8" square.)

To use the jig, simply position it over the holes and clamp it in place. The jig guides your chisel to accurately cut square mortises for the spindles. W

▲ *This jig guides your chisel to pare away the waste and square up the sides. Simply center the aluminum angle over the hole in your workpiece and clamp it in place.*

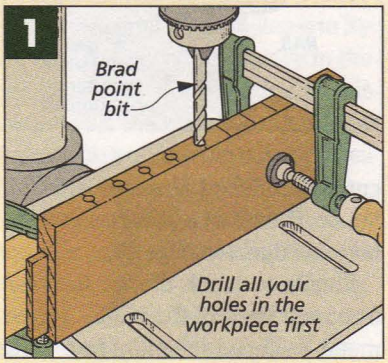

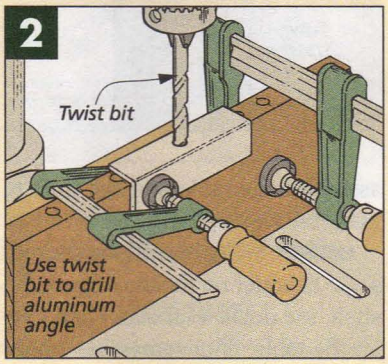

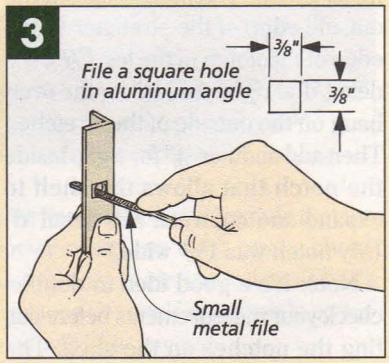

Double Groove Joint

When installing a solid wood panel in a frame (like the lid for the stacking boxes on page 14), you have to allow for wood movement. One way to tackle this problem is by using a simple interlocking double groove joint.

This joint is created by cutting grooves in both the frame and the panel. These grooves are the same width as the thickness of your saw blade and set to leave tongues that fit in the opposing grooves, see photo.

The key to setting up the joint is positioning the rip fence exactly so the blade leaves a tongue the same width as the groove, see Fig. 1. To check the fit, I just use a piece of scrap.

Simply cut a groove, then cut the test piece in half, see Fig. 2. Now flip one of the pieces over and check the fit. If the tongues are too thick move the fence away from the blade. If they're too loose, move the fence closer to the blade. W

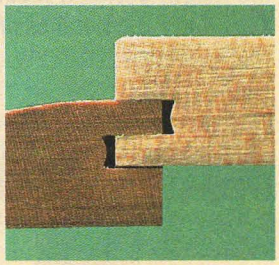

▲ *The key to a perfect fitting double groove joint is an accurate set up.*

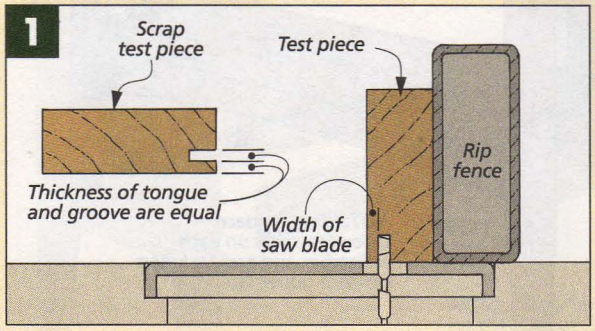

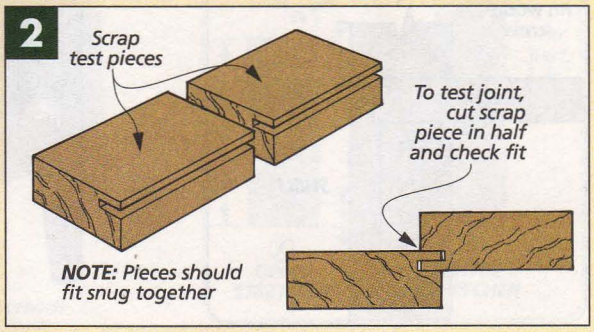

Bevel Jig

Typically, I use a table saw to cut a bevel on a workpiece. But trying to bevel the bottom side of the sofa table top shown on page 6, created a problem. It just wasn't safe to stand this large panel on end and use the table saw.

The solution was a shop-made jig that holds a router at an angle. With a straight bit in the router, it's easy to rout the bevel. Note: The flute length on the bit has to be long enough to cut the full width of the bevel. Mine was 1¼" long.

JIG CONSTRUCTION. The jig consists of four pieces: a fence, bit guard, auxiliary base, and a handle, see drawing below. To build the jig, start with the fence and bit guard. First, cut a notch at the center of the fence to provide clearance for the router bit. Then glue the bit guard and fence together.

To make this jig work, simply cut an angle on one end of the fence and bit guard that matches the bevel you need on your workpiece, see detail 'a'. Then when you add the auxiliary base, it tips your router to match the bevel. The auxiliary base is simply attached with a couple screws into the fence. Finally, glue and screw a handle to the fence.

SETTING DEPTH. Since this jig is designed to cut the bevel in several passes, you adjust the depth of cut by pivoting the auxiliary base, see detail 'c'. The arched slot allows the router to swing down to the required depth before locking it in position with a screw.

USING JIG. Start with the depth set shallow. Then increase the depth gradually until your bevel is complete, see detail 'b'. W

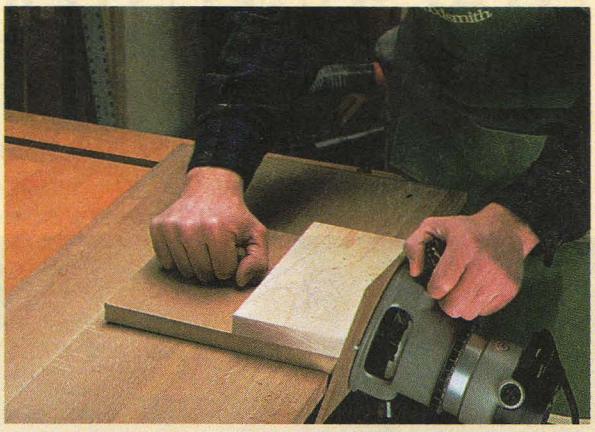

▲ *Working on the bottom side of the sofa table top, this jig and hand-held router make it easy to create a beveled edge with just a straight bit in the router.*

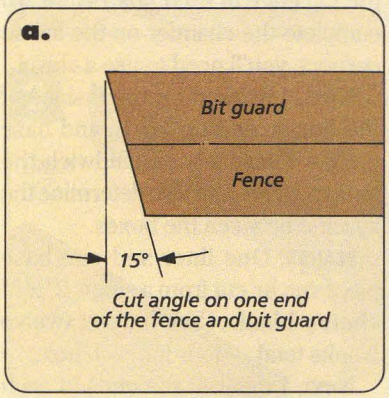

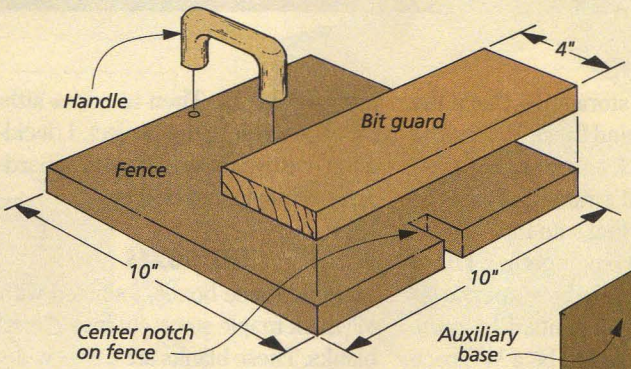

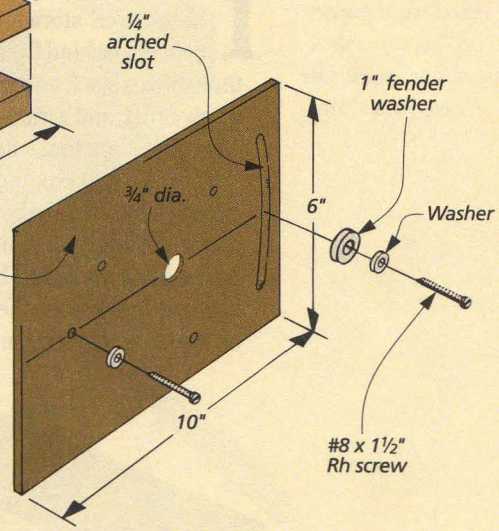

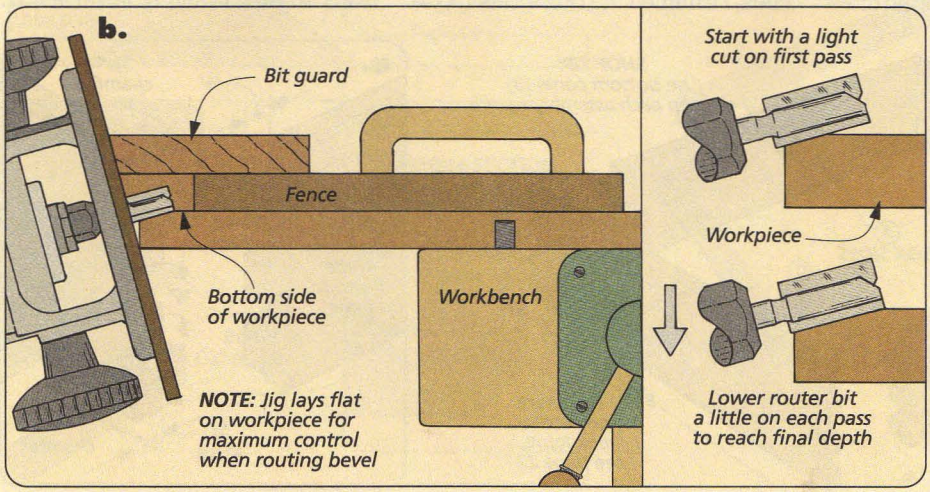

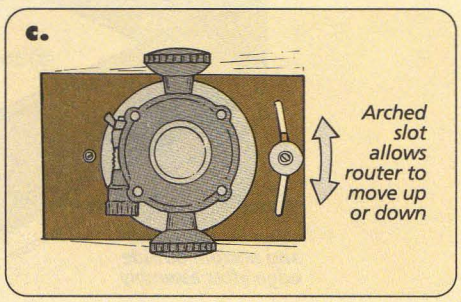

STACKING STORAGE BOXES

A maximum amount of storage in a minimum amount of space. That's the basic idea behind this unique box joint project.

Three-tiered storage — that's the concept behind these boxes. The three boxes stack on top of each other in any order, and a frame and panel lid covers the box that's on top.

To hold each box together, I used ¼" box joints. And to continue the ¼" pattern of the box joints, I built the boxes so there would be a ¼" space between them when they are stacked on top of each other, see margin drawing on page 15. Then to add a little bit of contrast to the project, I decided to use two different types of hardwoods: maple and cherry.

THE BOXES

To build these boxes, I started with ¼"-thick maple stock cut into 2" x 8" blanks. These blanks are a little wide, but after cutting the box joints on the ends, I trimmed the **box sides (A)** to final size, see drawing below. Note: Step-by-step instructions for cutting box joints begin on page 22.

Next, to keep the boxes square when gluing them together, I cut the **bottom panels (B)** to size and used them as squaring forms. These panels are made from ⅛" hardboard and match the inside dimensions of the boxes (7½" x 7½"), refer to the exploded drawing on page 15.

Once the glue is dry, relieve the sharp edges by routing a 1/32" chamfer around the inside and outside of the top edges. Then chamfer just the outside of the bottom edge. (To keep these straight, you may want to mark the top edge of each box.) Note: To complete the chamfer on the inside corners, you'll need to use a chisel.

Next, I worked on the insides of the boxes, adding liners and base pieces. These pieces sandwich the bottom panels and also determine the spacing between the boxes.

BLANKS. One liner and one base piece can be cut from a single 2" x 8" cherry blank. (You'll need twelve blanks total — four for each box.)

Next, I mitered the ends of each blank so they would fit inside a box.

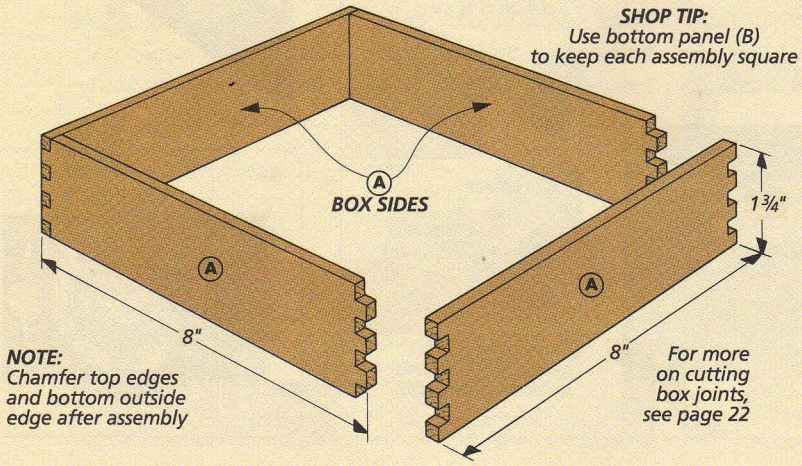

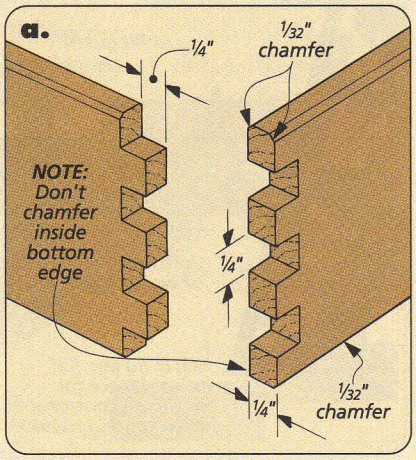

The trick here is to avoid making the liners fit too tight. The pieces should slide in easily, without being able to shift from side to side.

Note: Up to this point, I had been building all three boxes at the same time. But now, to get a custom fit, I worked on each box separately.

LINER AND BASE. After the blanks fit inside the box, they can be ripped into two pieces: a 1¼"-wide **liner (C)** that creates a lip inside at the top of the box, and a ⅝"-wide **base (D)** that the box sits on, see Fig. 1. Once that's done, sand a slight chamfer on the top, inside edge of each liner and another on the bottom, outside edge of each base piece.

Now the liners can be glued in place. To create the lip, these pieces should end up ⅛" from the top of the box. To do this, I made a ⅜" spacer to set the liner on, see Fig. 2.

But when applying the glue, you don't want any to get on the exposed edges of the lip you're creating. So apply the glue only to the inside of the box, so it's spread down as the liners are pushed in place, see Fig. 2.

FINISH. Now before adding the base and the bottom, I applied a couple coats of an oil finish. The reason for this is simple. When the velvet-lined bottom is added next, it will be just about impossible to finish the inside of the box without getting finish on the velvet. (But keep in mind that the base pieces still need to be glued inside the box, so don't apply finish to the inside of the box below the liner.)

BOTTOM. Now it's time to add the bottom panel. Since it was used earlier to square up the boxes, it's already cut to size. All you need to do is attach the velvet, see Fig. 3. (I used a spray adhesive to do this.) Then set the bottom panel into the box and sandwich it in place by gluing in the base pieces.

SAND TO FIT. At this point, the boxes are done. But you may need to sand the base so the boxes will stack on top of each other easily. When they do, you can apply oil to the unfinished parts of the boxes.

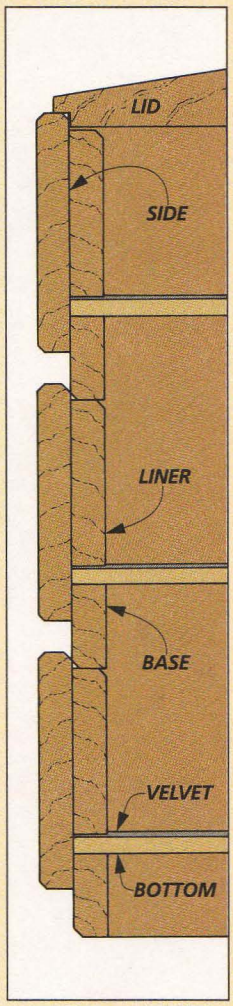

▲ *The ¼" spacing between the boxes is determined by the liners and bases inside the boxes.*

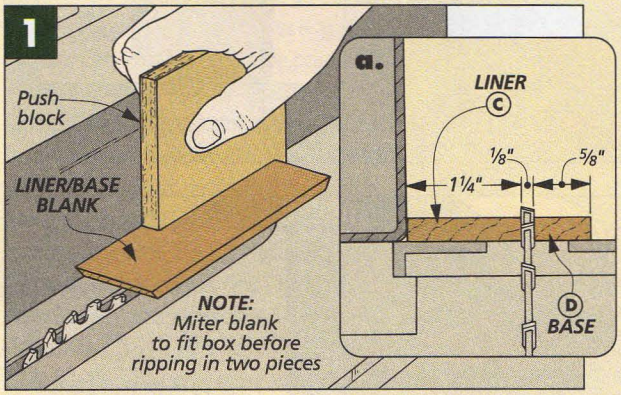

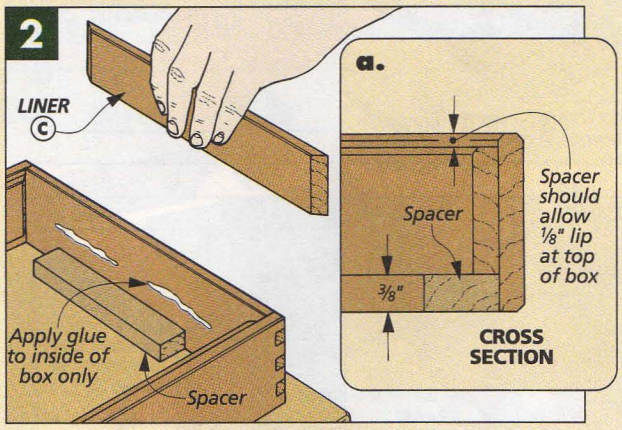

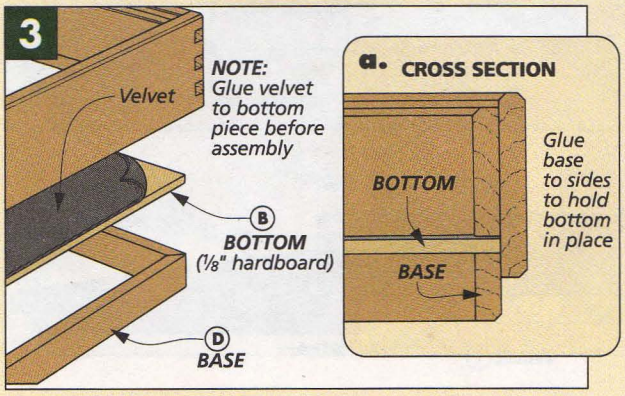

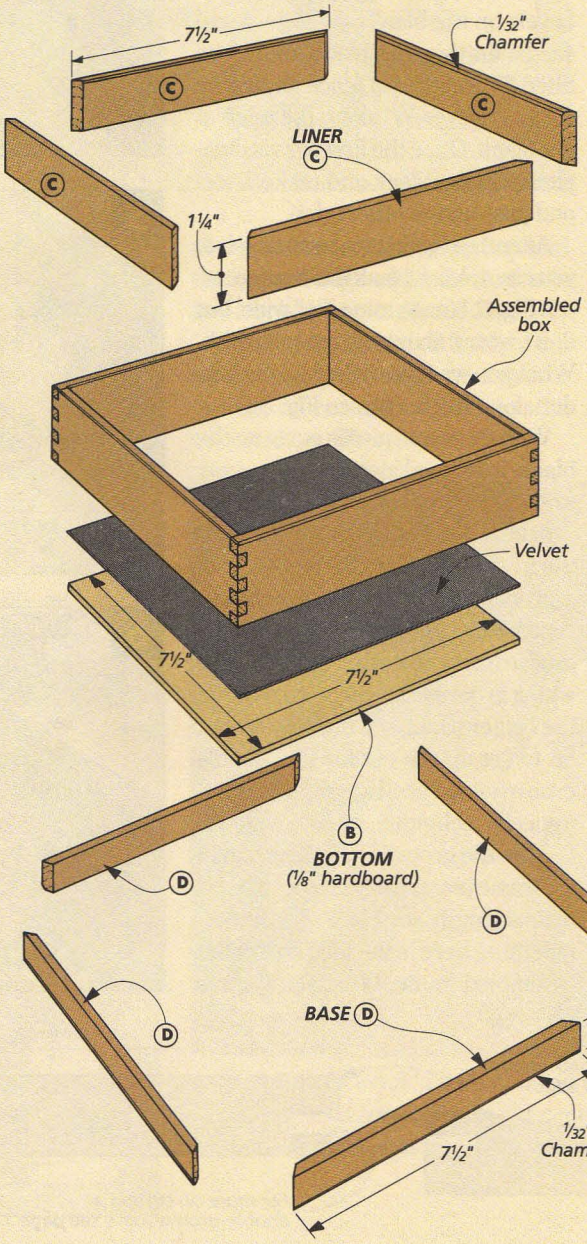

Box Lid

Now that the boxes are complete, the next step is to build a lid. Again, I used both maple and cherry. The frame of the lid is made with cherry, while the panel and handle are maple.

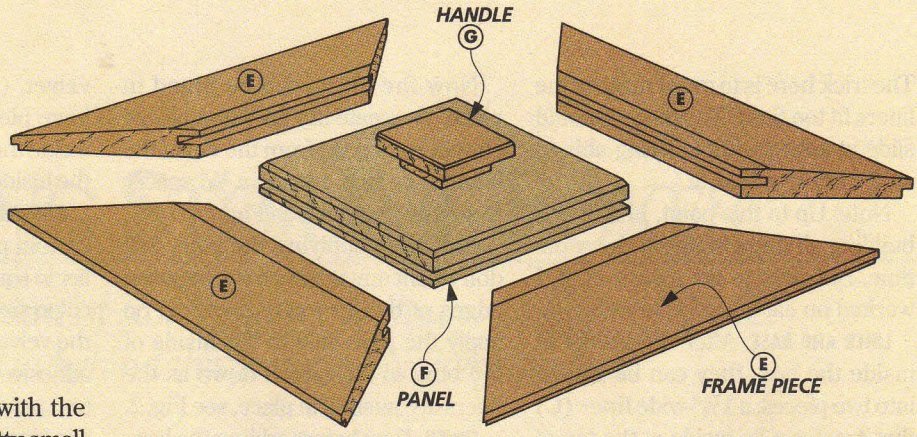

FRAME

To make the lid, I started with the frame. These pieces are pretty small to cut out on the table saw. So to make it safer to work with the **frame pieces (E)**, I started with two ½"-thick blanks that were oversize in width (5½"), refer to Fig. 4. This way, I could cut two pieces from each blank.

The first step is to cut a couple bevels on the blank, see Figs. 4 and 4a. To do this, the blade should be tilted 8°, and the rip fence should be set so it leaves ¼" along the edge of the blank. Once the first pass is complete, flip the blank and make a second pass on the other edge.

After the edges have been beveled, you can rip each blank into two pieces, see Fig. 5. I made mine 2⅛" wide, but don't worry about the overall width. What you want is a ⅜"-wide, flat border along the bevel, see Fig. 5a.

With the frame pieces cut from the blank, it's a good idea to sand out any saw marks on the bevels.

GROOVE FOR PANEL. Before mitering the frame pieces to final length, I cut a groove in each piece to hold the center panel, see Fig. 6. This 5/16"-deep groove has to be located so it will mate with a groove that will be cut later in the center panel, see drawing below. So to set up the cut for this double groove joint, I used a scrap piece and a special technique, refer to page 12.

After the grooves have been cut in the frame pieces, they can be mitered to final length, see Fig. 7. The important thing here is the final size of the assembled frame. What you want is

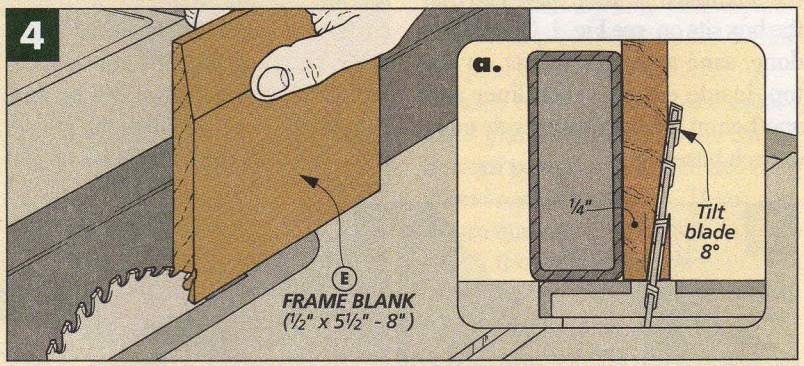

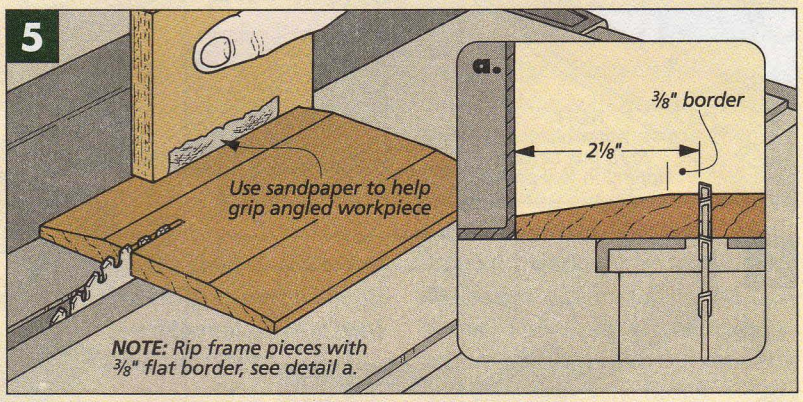

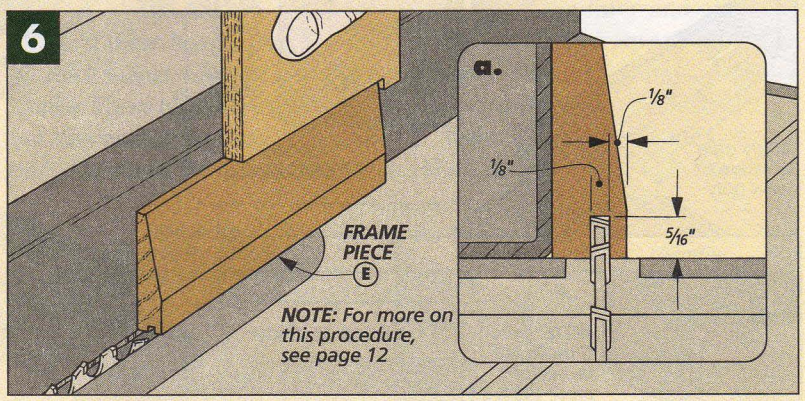

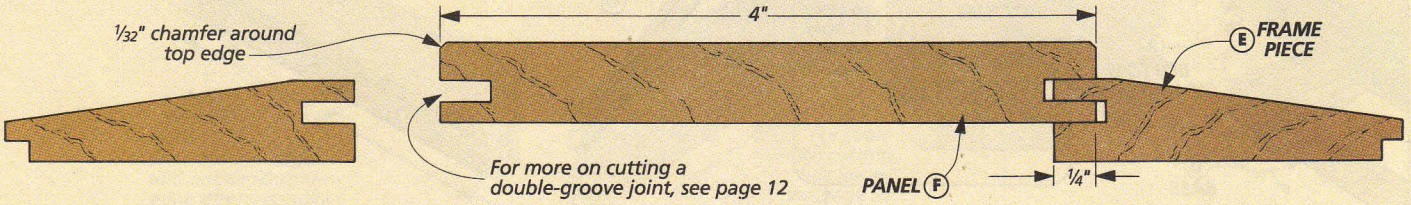

a lid frame that's slightly smaller than the box it sits on — about 1/8" smaller on each side. (My frame pieces ended up 7 3/4" long.)

PANEL

The frame pieces are complete now, so you can dry assemble them to determine the size of the center panel. The **panel (F)** will equal the size of the opening in the frame, plus 1/2" for the interlocking grooves, see the drawing at the bottom of page 16.

Once the panel is cut to size, I routed a 1/32" chamfer around the top edge of the panel, see Fig. 8a. Then the next step is to cut a 5/16"-deep groove along each edge, see Fig. 8. These grooves will mate with the grooves cut earlier in the frame. Here again, careful setup is the key, see page 12.

LID ASSEMBLY. With its mitered ends and beveled edges, this frame could be a real challenge to glue up — if you tried to use clamps. But the assembly isn't that difficult if you use just hand pressure. Simply glue up the frame in two sections, see Fig. 9. Then glue these two assemblies around the panel (but don't glue in the panel).

HANDLE. After the glue was dry, I added a small **handle (G)** to the center of the lid. To do this, I cut a couple small, square blocks from 1/4"-thick maple and glued them together, see Figs. 9 and 9a. Then I simply glued the handle to the lid and sanded a slight chamfer on the edge.

At this point, the lid sits on top of the box with nothing to hold it in place. So I cut a small rabbet around the bottom edge of the lid until it fit into the box openings, see Fig. 10.

Finally, I applied an oil finish to the lid and then cut and glued a mirror into the recess under the lid, see the photo below. W

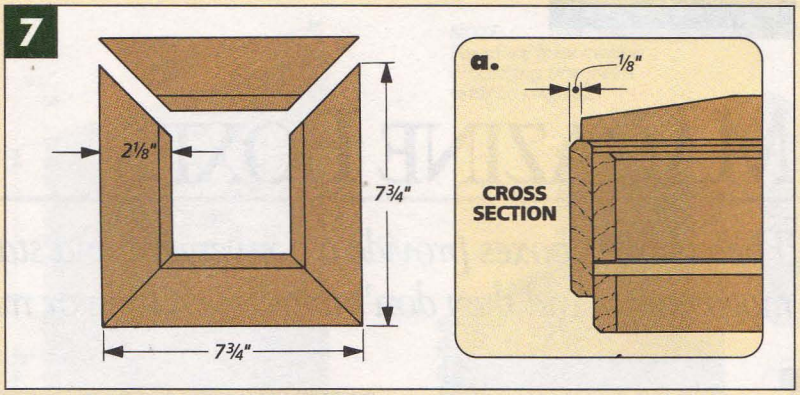

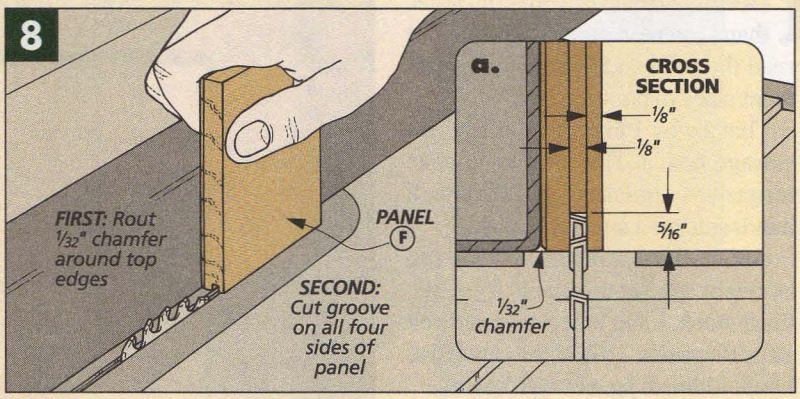

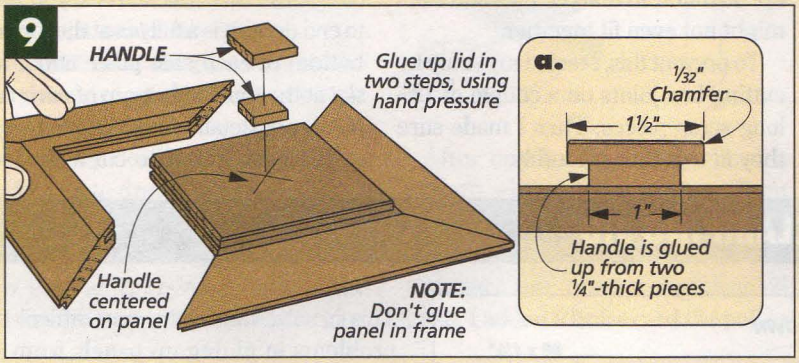

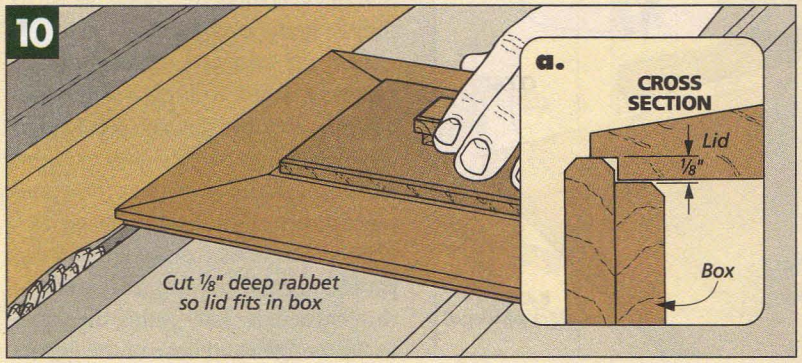

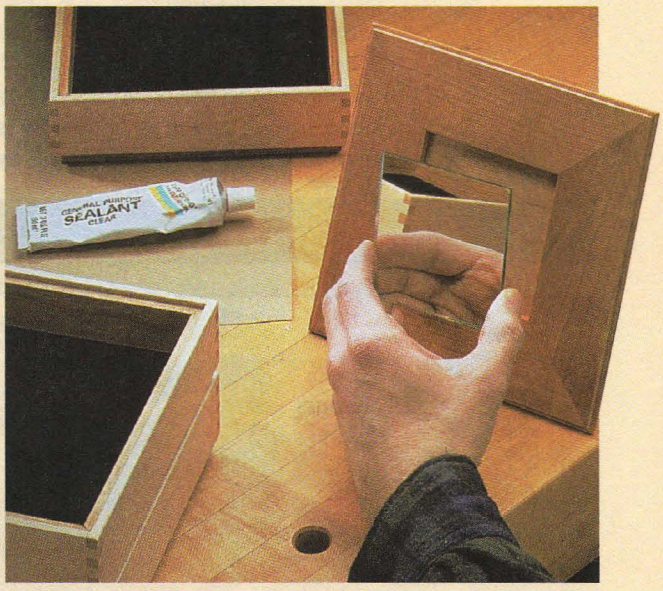

▲ *For a special touch, I added a small mirror to the back side of the lid panel. Simply cut a mirror to fit in the frame and glue it in place with silicone sealant.*

MAGAZINE BOXES

These simple boxes provide a convenient and stately way to store magazines. And they don't take much time or material to build.

It seems like magazines pile up faster than I can read them. And once I've read them, I can never find a convenient place to put them.

That's why I like these magazine storage boxes. They will keep your magazines organized, and they look handsome on a shelf or bookcase.

GLUE UP PANELS. I began building the boxes by gluing up panels from ¼"-thick stock. Each box requires three 12" x 10" panels. To hold the panels flat, I built a simple jig, see box below.

Once the glue dries, you can begin cutting the panels to length. (They'll be cut to width later.) Cut the two side panels to a length of 9¾". Then cut the third panel into two 4½"-long pieces for the front and back.

BOX JOINTS. The **sides (A)** and **ends (B)** of the box are joined together with box joints. Although they look time-consuming, the box joints are easy to make using a simple jig, see page 22.

When you're cutting this many box joints, setting up the jig accurately is very important. Even if you're off by only a fraction of an inch, when you multiply that error by the number of pins you're cutting, it can really add up. So much so that the pins and slots might not even fit together.

To prevent this, I tested my setup by cutting box joints on a couple of 12"-long scrap pieces. Then I made sure they fit together smoothly.

BOTTOM. After cutting the box joints, the pieces can be cut to finished width. I cut mine 11¾" wide, but the exact dimension isn't critical. What you want to end up with is a full *pin* at the top and bottom of each side piece and a full *slot* at the top and bottom of each end piece, see detail 'a' next page.

The next step is to cut a ⅛"-deep

CLAMPING JIG

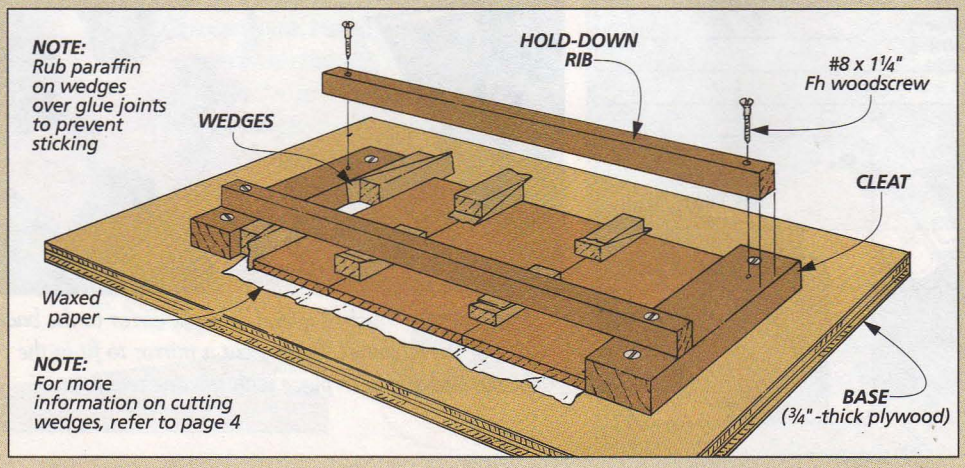

This jig solves one of the most difficult problems in gluing up panels from thin stock: holding the panels flat while they're being clamped.

The jig consists of two cleats screwed down to a plywood base. Then hold-down ribs are screwed to the cleats. And small wedges placed underneath the ribs keep the panel pieces from shifting and bowing.

Note: I used waxed paper under the panel and paraffin wax on the wedges to avoid accidentally gluing the panel to the wedges and base of the jig.

groove on the inside face of all four pieces. The width of this groove is sized to fit a bottom of ¼"-thick hardboard, see detail 'b'.

To determine the width and length of the **bottom (C)**, dry assemble the box and measure the bottom opening, including the depths of the grooves. Now subtract 1/16" from each dimension to allow for clearance. Then cut the bottom piece to size.

ASSEMBLY

To make it easier to get magazines in and out, the back corner of the box is cut away. But if you do this before assembling the box, it's difficult to position a clamp across the top of the box. So I glued and clamped up the box *before* starting on the cutaway.

And even though this is a small project, the box joints can make assembling it a bit tricky. To give myself a little more time, I used white glue since it doesn't set up as fast as yellow glue.

I also used a lot of clamps to help pull the box joints together, see Fig. 1. You may need to reposition some of the clamps as you're assembling the box to apply pressure where you need it.

One more thing. Since the grooves for the bottom are visible on the sides of the box, you will need to make and glue some small wooden plugs into these gaps, see detail 'c'.

CUTAWAY. After the glue was dry and the pins were sanded flush, I laid out a gentle double-curve on one side of the box, see detail 'd'. (I used a large coffee can to draw the arcs.)

To get a smooth cut on the straight section of the cutaway, I used a table saw, see Fig. 2. Then I completed the cut using a band saw, see Fig. 3.

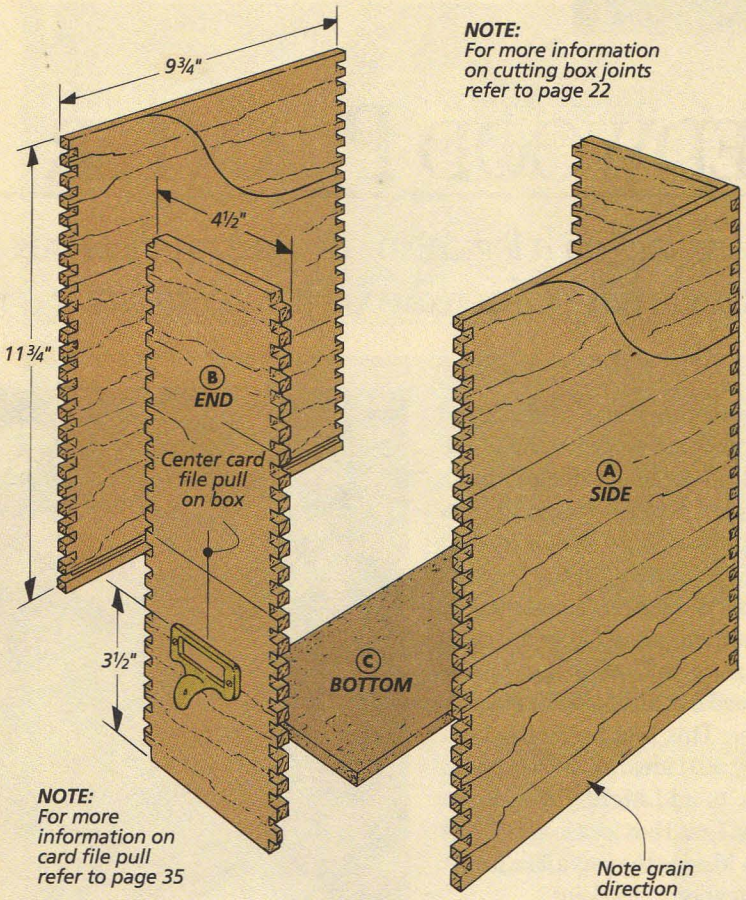

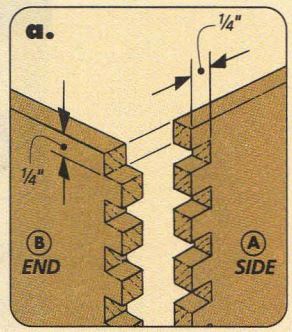

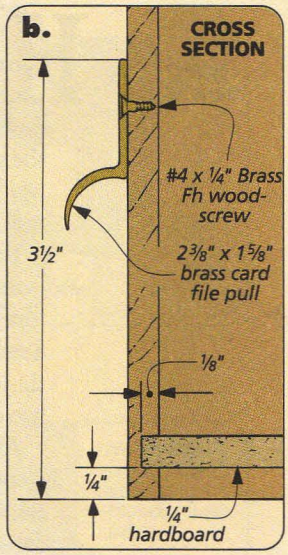

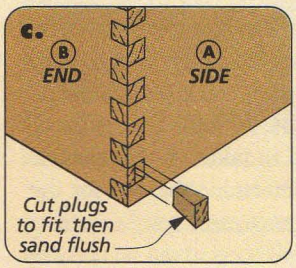

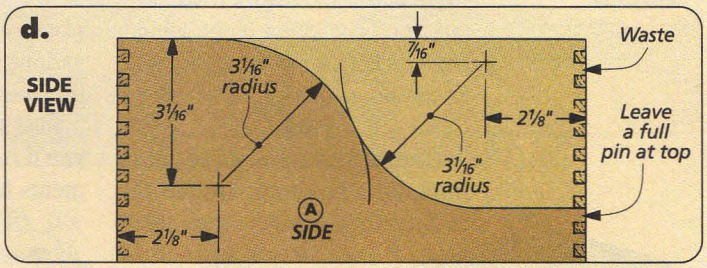

After cutting the curve, sand it smooth with a drum sander. Then round over all the outside edges with a ⅛" round-over bit and a router.

ADDING A PULL. After wiping on an oil finish, I added a brass card file pull to make the box easier to pull off a shelf, see Sources on page 35. Note: The ½" screws that come with the pull are too long. You'll need to purchase a couple of ¼" brass screws to use as replacements, see detail 'b'. W

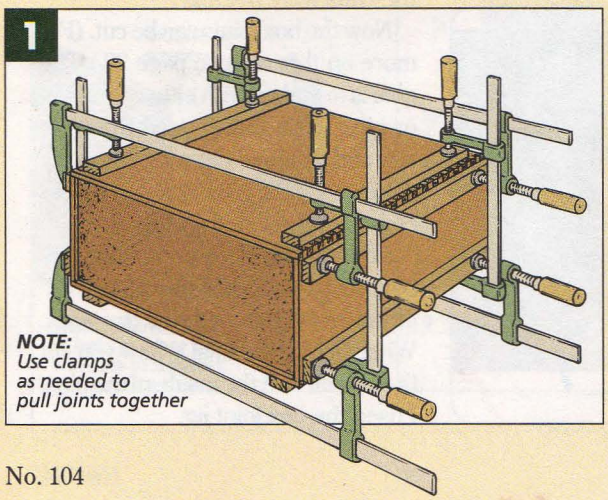

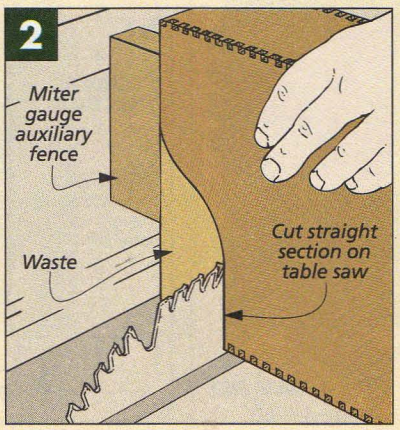

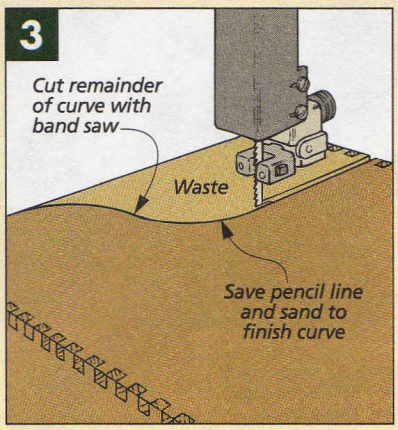

REDWOOD PLANTER

Like the logs on a log cabin, the pins on these box joints extend past the sides and ends of this redwood planter to give it a rustic appeal.

Here in Iowa, a flood of flower and garden catalogs arrive around the first of the year. After looking through the pages, I decided a planter box to hold some of these flowers would make an interesting spring project.

But the problem with most planters is the bottom rots out from the moisture in the soil. To solve this, I made a redwood box that fits around a plastic liner. This box holds the liner securely and hides it at the same time.

Also, to add highlight to these planters, I used box joints with extended pins. Making the pins a little longer calls attention to the joint.

Note: This planter works two ways. It can sit on a deck, or by building a pair of brackets, it can hang on a wall.

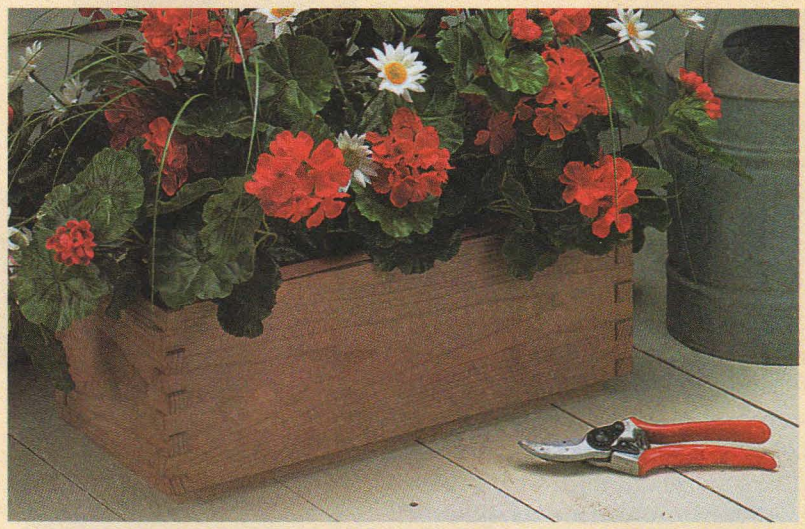

BOX

To build this planter, you simply make a bottomless box to fit around the plastic liner. But since liners come in various sizes, it's a good idea to have the liner before you start to build.

SIDES & ENDS. With the liner in hand, you'll need to take a few measurements to determine the size for the **sides (A)** and **ends (B)**. First, it has to be tall enough to cover the liner (my liner was 5½" deep). So my pieces were cut from a 1x8 piece of redwood, see drawing at left.

But determining the length of the pieces isn't quite as easy. You have to work from the inside out. First, measure the length underneath the lip of the liner that runs around the top edge, see detail 'b'. Then add in a little extra for clearance (about ⅛").

Next, add the length of the box joint at each end (13/16"). For the 28⅞"-long liner I used, my sides were 30⅝" and the ends were 8" long.

Now the box joints can be cut. (For more on this refer to page 22.) The goal is to end up with either a full slot or pin. To do that, I used the table saw and trimmed the waste from my sides and ends, see Fig. 1. My pieces ended up 6 3/16" high (wide).

CHAMFER PINS. Then to complete the box joints, I added a decorative 1/16" chamfer to the ends of the pins. What's a little unusual is how you cut the chamfer on the inside of the pins. I used the box joint jig.

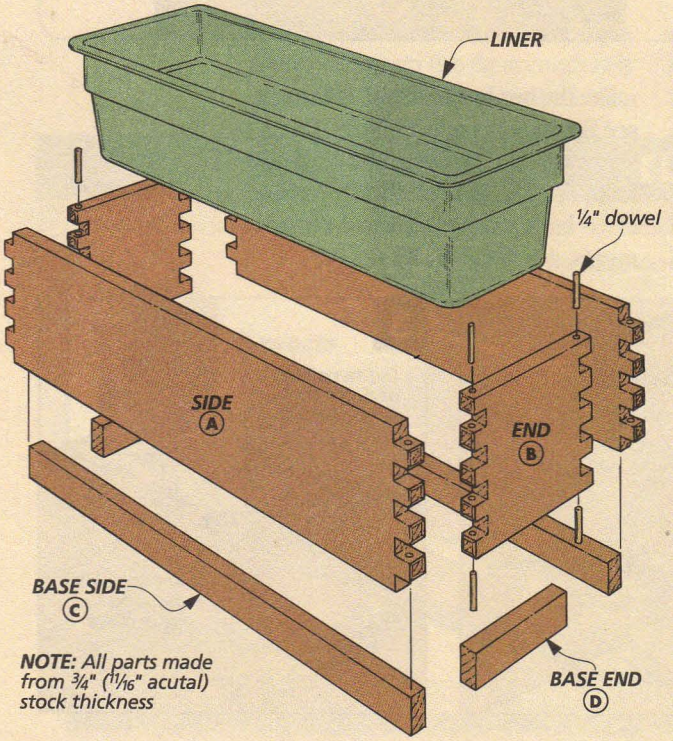

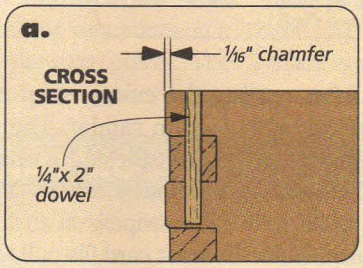

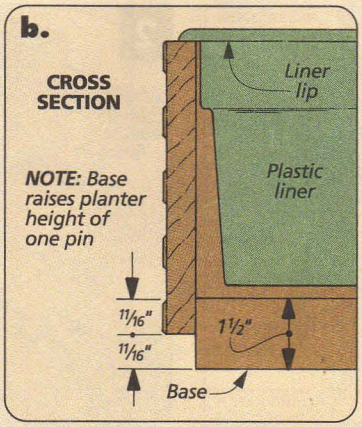

Just tilt the blade to 45° and reposition the jig, see Figs. 2 and 2a. Then to chamfer the outside edges, remove the box joint jig and use the rip fence, see Figs. 3 and 3a.

ASSEMBLY. With the pins chamfered, the box can be assembled. But rather than glue the joints and have to clean up squeeze-out around the protruding pins, I pinned the joints with a 1/4" dowel, see detail 'a' in exploded view. To do this, just drill a hole from the top and bottom sides at all four corners and tap in the dowels.

BASE OR BRACKETS

At this point the "box" is complete, but the project isn't. It's designed with a couple options. You can add a base or a pair of arched brackets.

BASE. If you want the planter to sit on a deck, you'll need a base. It raises the planter up and makes it easier to grasp. The base is just four pieces of redwood, two **base sides (C)** and two **base ends (D)**, cut to fit inside the box and glued in place, see exploded view detail 'b'. Note: Allow about 11/16" of the base to extend below the box. This matches the pin width.

BRACKET. However, if you intend to hang the planter, you'll need to build a pair of brackets to hold the box, see the photo below. The bracket consists of two pieces: a mounting board and a support.

The **mounting board (E)** is a 1 1/2" x 12 1/4" piece of redwood chamfered on the outside edges with four holes drilled in it, see Fig. 4.

Attached to the mounting board is an arch shaped **support (F)**. It's notched on top to keep the box from sliding off. The distance between the notches matches the inside width of your box. (Mine was 6 3/8".) To make the support, draw the arch, cut it out on the band saw, and then sand up to the line, see Fig. 4a.

Finally, rout a 1/8" chamfer on the outside edges of the arched support and glue and screw the support to the mounting board.

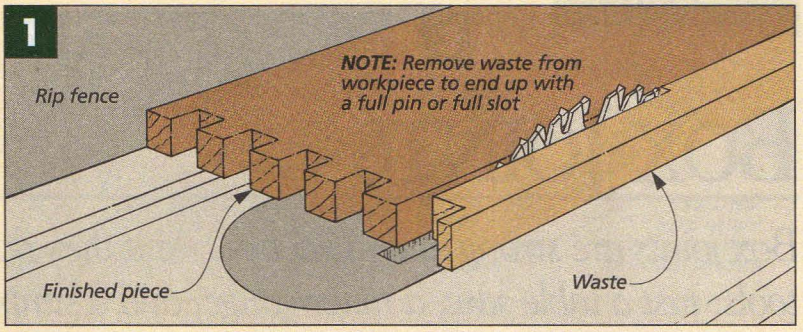

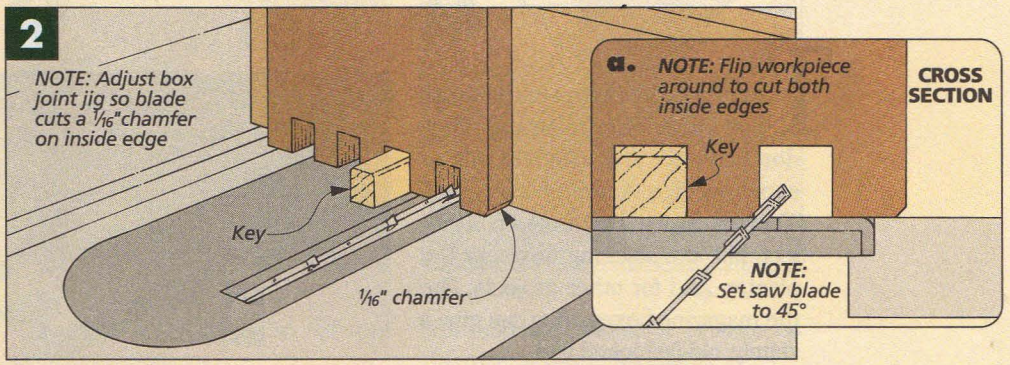

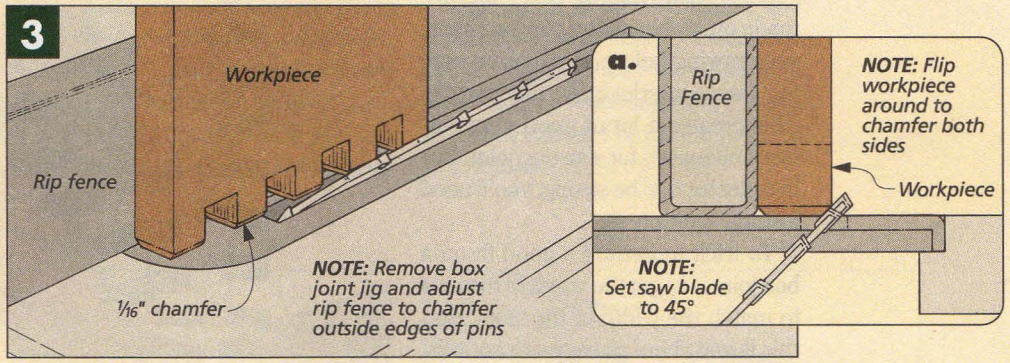

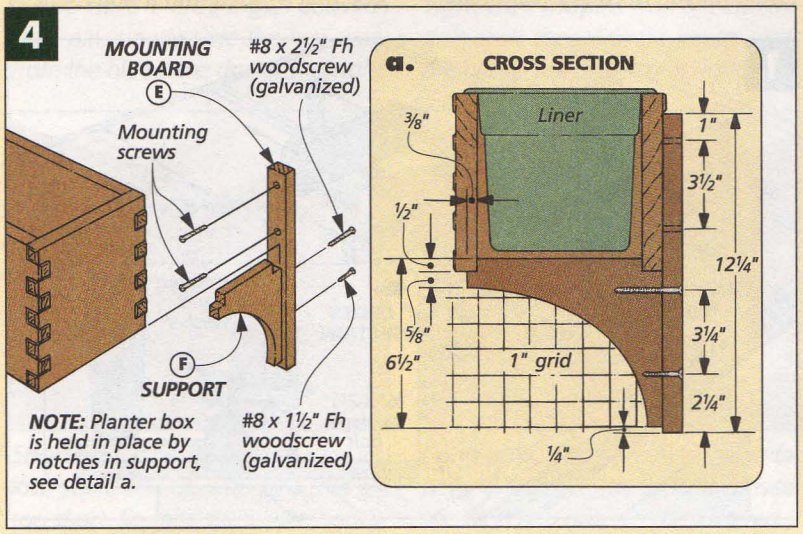

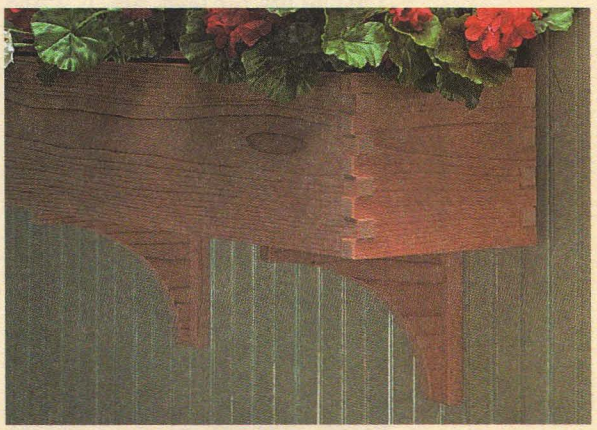

▲ *A pair of notched brackets hold the planter box securely in place when attached to a wall. Yet it's easy to remove the planter by simply lifting the box off the brackets.*

BOX JOINTS

Box joints are strong and attractive. And they don't require any special tools: just a table saw, a miter gauge, and a simple, shop-built jig.

There are a lot of reasons for using box joints. They're strong. They don't require any special tools or expensive jigs. And they look good. They can be used to "dress up" a project, like the stacking boxes or the planter. And for other projects, like the magazine boxes, they can give a stately, old-fashioned feel.

INTERLOCKING FINGERS. Box joints are made up of alternating pins and slots, see drawing below. The pins on mating pieces interlock like tiny fingers. This creates a lot of good glue surface and makes for a strong joint. But in order for it to be strong, you'll need a snug, accurate fit.

To trick to getting a good fit on a box joint is to get the width of the pins to match the width of the slots. And this is just about as easy as it sounds. All you need is a jig that uses a small key. This key determines the width of both the pins and the slots.

But first, you have to decide whether to use the table saw or the router table. The jig for each is essentially the same. But most of the time, I like to use my table saw. It works much quicker than a router, especially when cutting large box joints.

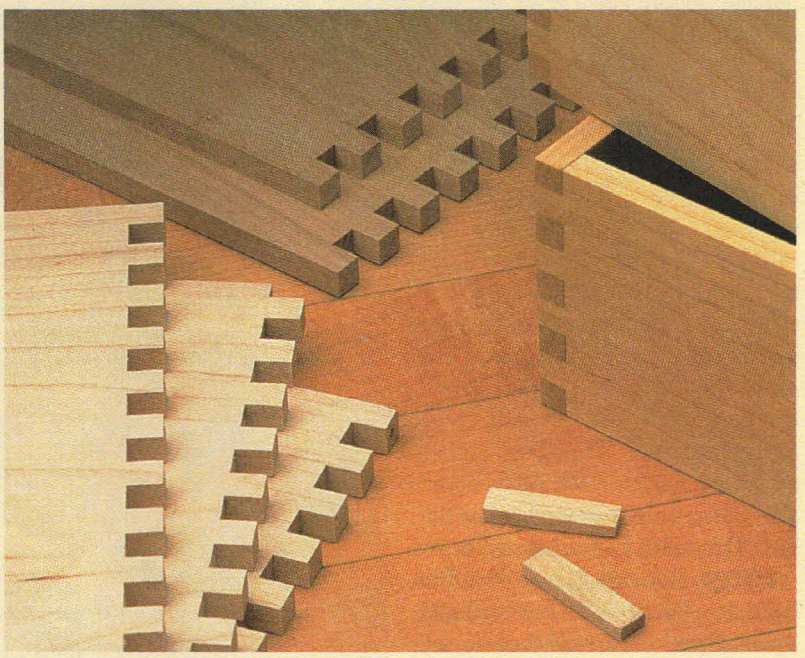

BOX JOINT JIG

To cut box joints with a table saw, you need three things: a dado set, a miter gauge, and a jig. The jig can be very basic. All you need is a pair of auxiliary fences and a hardwood key.

FENCES. The fences are joined with carriage bolts and wing nuts, see Fig. 1. The fixed fence is screwed to the miter gauge. It's slotted so the fence in front can be adjusted side-to-side.

KEY. There's also a small, hardwood key that's glued into a notch cut in

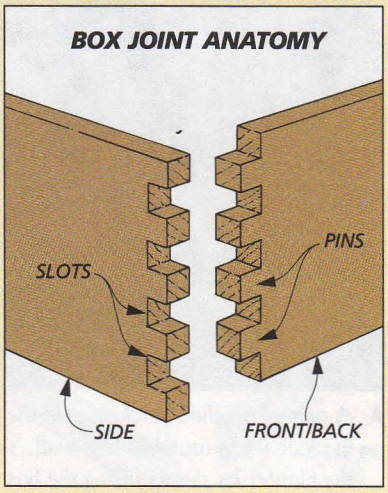

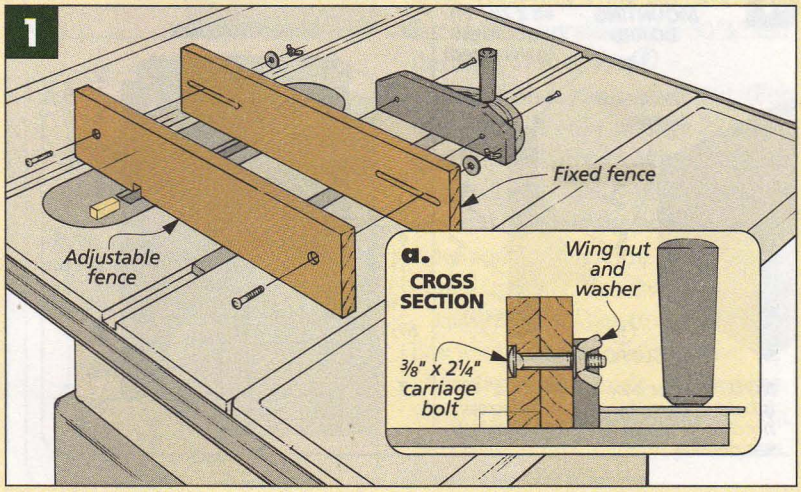

the front fence, see Figs. 2 and 3. The nice thing about using a key is that once the jig is set up, cutting the box joints is just about automatic. But it also means that the size and position of this key must be perfect.

Since the key fits into a notch, its width and height are determined by the dado blade that cuts the notch. The width of the dado determines the spacing of the box joints. And the height of the dado determines the length of the pins.

Note: For my box joints, I set the dado blade a hair above the thickness of the workpiece, see Fig. 2. Then after the key is glued in place, I sand it down, so the workpiece won't bottom out on the key, see Fig. 3.

The position of the key is also crucial. It determines whether the pins will fit or not. To get the key close to where it should be, I use an identical sized spacer to position it, see Fig. 4.

TUNING THE JIG. At this point, the jig just needs to be fine tuned. This simply involves cutting a test corner. And for an accurate test, I use scrap pieces that are roughly the same width as the finished pieces.

To cut a test corner, butt one piece up against the key and cut a slot. Now, reposition the piece so the slot straddles the key and make another pass.

Repeat this process until you get to the end of the board. Now this piece will help start the same process on the mating piece, see Fig. 5.

Test the fit of the two pieces and make any adjustments necessary, see the drawings below. The goal is to get a snug fit — nothing too tight. But the pieces should require a few taps with a mallet to go together.

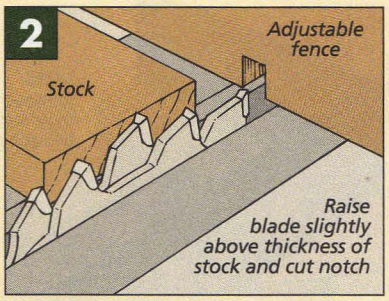

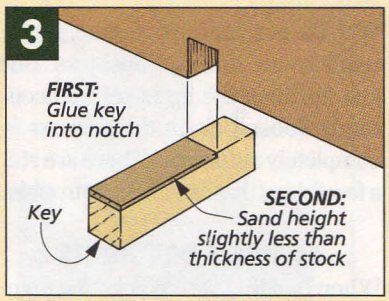

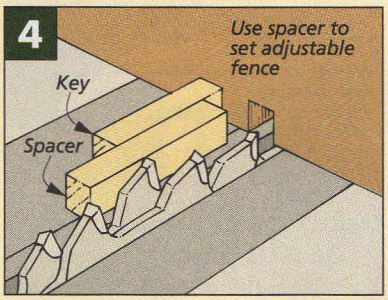

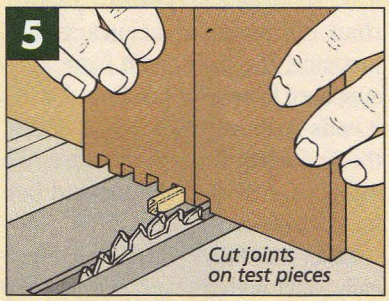

TROUBLESHOOTING

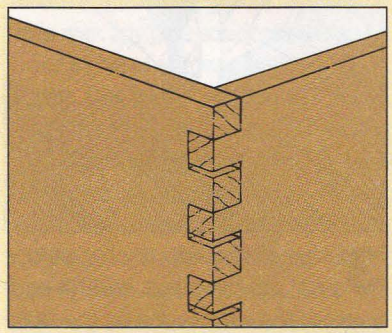

Loose fit. *If there's a gap between each pin, simply slide the key away from the blade, see drawing at right.*

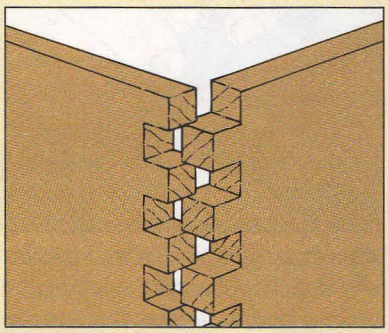

Tight fit. *If the pins won't fit into the slots at all, then slide the key towards the blade, see drawing at right.*

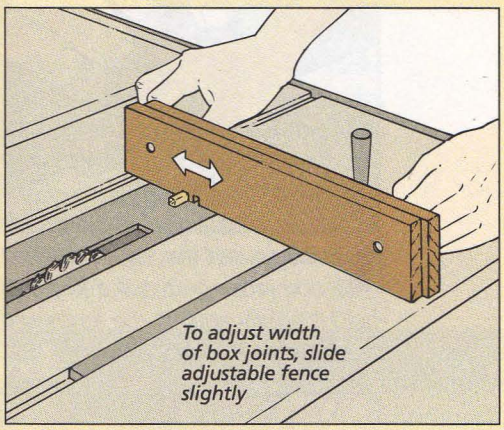

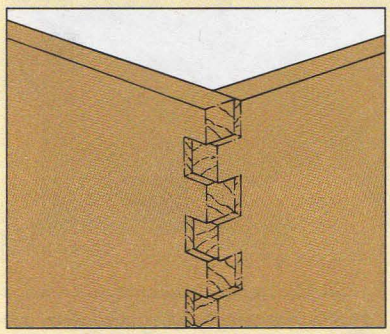

Short pins. *If the dado blade is set too low, you'll end up with pins that are too short. So raise the blade slightly.*

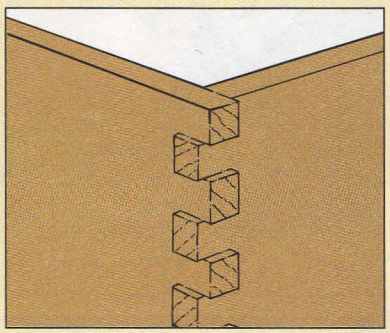

Long pins. *If the pins extend too far beyond the sides, the dado blade is set too high and needs to be lowered.*

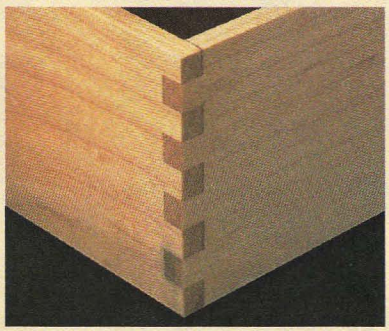

▲ *For a perfect box joint, the two pieces will fit snug, and the pins will be flush after a little sanding.*

With the box joint jig complete, you're ready to get down to business. But just because the jig is set up accurately doesn't mean the process is completely automatic. There are still a few things that can give you trouble.

ACCURATE BOX JOINTS

When building with box joints, I typically shoot for visual accuracy rather than dimensional accuracy. For instance, the planter on page 20 is supposed to be 6 3/16" tall. But whether it ends up exactly this height or not, the important thing is that there's a full pin (or slot) at the top and bottom of a piece.

EXTRA-WIDE PIECES. To do this, I typically start with workpieces that are extra wide and then trim them after the box joints are cut, see Step 6.

Of course, there are times when a workpiece has to be a specific dimension, like when building a drawer. But I still start with an oversize piece. I simply trim the same amount from both the top and bottom.

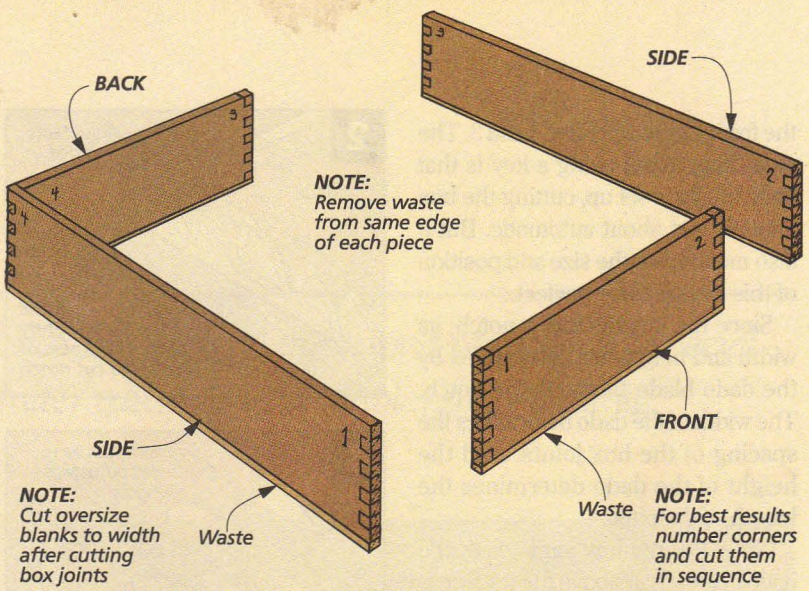

LABEL PIECES. Another thing I like to do is label the front, back, and side pieces and number the joints so I can cut the joints in sequence, see drawing above and Step 4 below.

CONSISTENT PRESSURE. When cutting the box joints (see the steps below), it's important to be consistent. Even shifting the pressure slightly can affect the fit of the box joints. So I hold the jig with both hands and perform each pass exactly the same.

CLEAN BOX JOINTS

Unfortunately, even if your box joints fit perfectly, you may run into other problems: chipout and uneven slots.

CHIPOUT. Chipout is inevitable — sooner or later it's bound to happen.

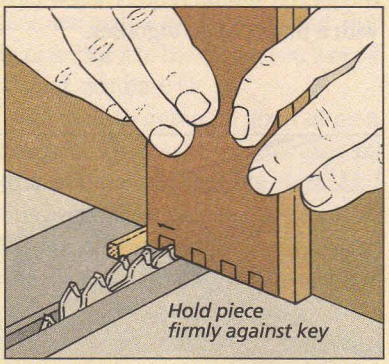

1 *To begin, set the top of the first workpiece against the key and hold it tightly against the fence and the table saw. Then cut the first slot.*

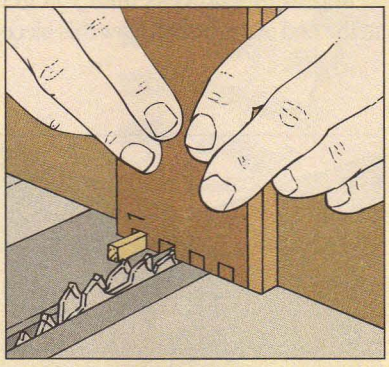

2 *Now, move the piece so the first slot straddles the key and cut a second notch. Repeat this process until all the slots on this end are cut.*

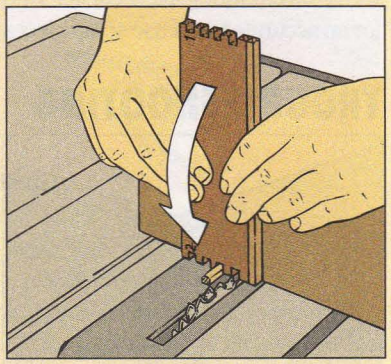

3 *After all the slots are cut on one end, flip the piece end-for-end, keeping the waste edge on the same side. Then cut the slots on this side.*

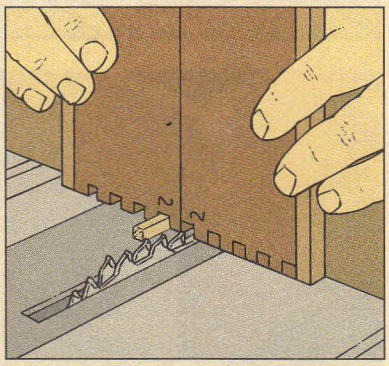

4 *Now, rotate the first piece so the waste is outside and the first slot fits over the key. Butt the mating piece against the first and cut the first slot.*

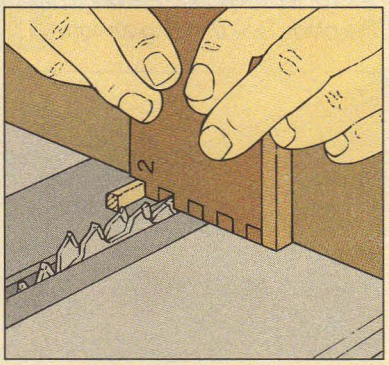

5 *Now, slide the just-cut slot in the mating piece up tight to the key. Continue this procedure until the box joints are cut on all pieces.*

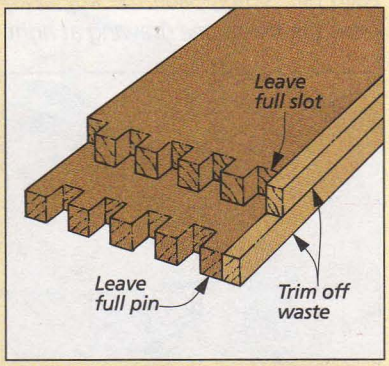

6 *Before assembling the box, rip the waste edge off each piece, so there's a full pin and slot on the top and bottom of the piece.*

But there are a few things you can do to minimize it. First, make sure your blade is sharp. And don't push the piece through the blade too quickly. And if you're getting a lot of chipout, slip a scrap piece of hardboard behind the workpiece so the cut can always be backed up completely.

CLEANING THE SLOTS. Another problem, common with dado blade cuts, is uneven slots, see Fig. 6a. What you want is to get them flat without affecting the accuracy of the fit.

To do this, I make a simple sanding jig. Start with a piece of scrap and cut a tongue on one edge, see Figs. 6 and 6a. The tongue should slide smoothly in the slot and match its depth. Next, attach a piece of adhesive-backed sandpaper to the bottom of the tongue and sand the slots flat.

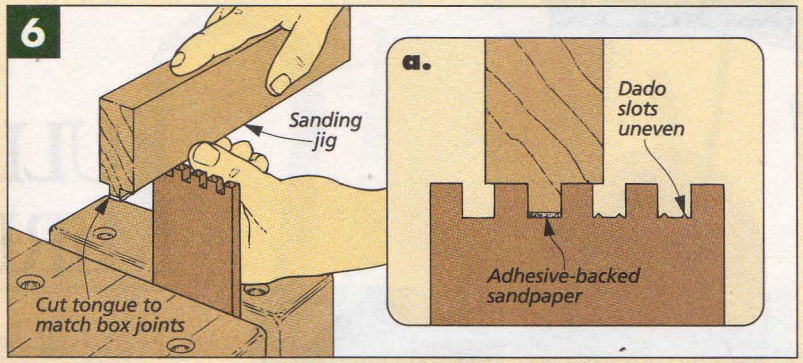

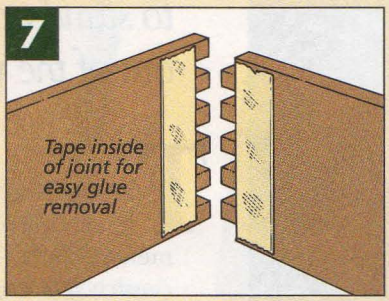

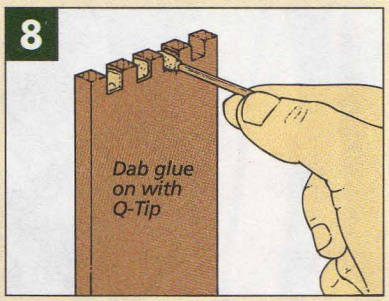

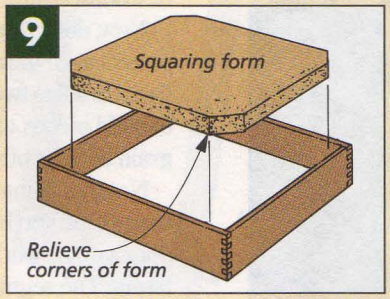

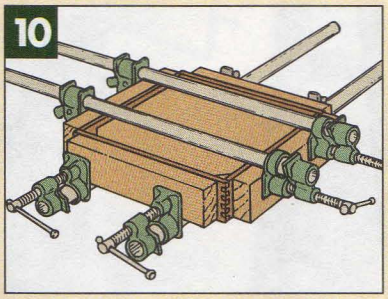

SMOOTH ASSEMBLY

At this point, you're ready to assemble the box. Here's where things can get a little frantic. But I take a few precautions to avoid this.

First, I try to avoid a lot of mess. After all, there are a lot of opportunities to slop glue around. So I tape the inside edges of the pieces, see Fig. 7. This way, any glue squeeze out can be carefully peeled away later.

TIME SAVERS. To buy myself more time, I use white instead of yellow glue. White glue sets up slower, which helps when there are a lot of box joints, like on the magazine boxes.

Also, to get the glue on quickly, I use Q-Tips and dab glue onto the sides of the pins, see Fig. 8. You don't want much glue, though. Even a little bit creates a strong hold.

CLAMPING. When it comes to clamping up box joints, I take a couple precautions so there are no surprises.

After dry assembling a project, I often make a squaring form out of scrap wood, see Fig. 9. I also make sure I have the right clamping blocks, see Fig. 10. The important thing here, is that they don't cover the box joints. Otherwise, they might prevent the joint from pulling tight.

All that's left now is to sand the pins flush with the sides of the box. W

HIDING THE GROOVE

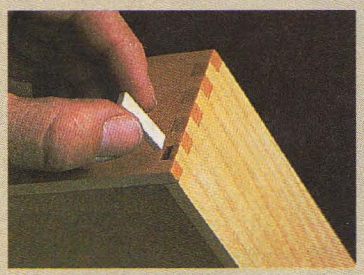

▲ *A full-length groove for a bottom panel will leave a small, square hole. But you can fill the hole with an end grain plug and make it virtually disappear.*

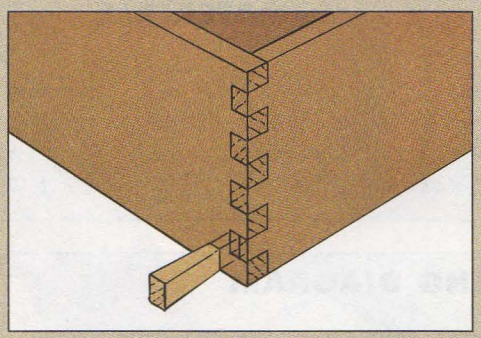

Plug the hole. *Start by cutting an extra-long plug to fit the hole. Taper the sides slightly to get a snug fit and glue the plug in place.*

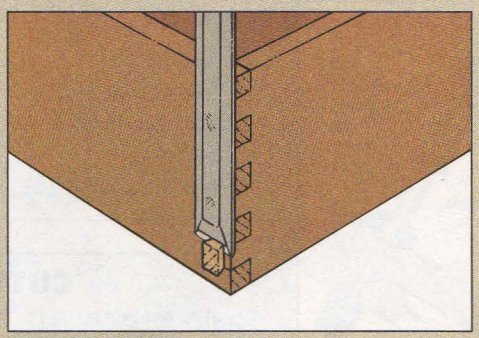

Trim the plug. *Next use a chisel to pare off the excess by working around the plug towards the center. Then sand it smooth.*

FULL-LENGTH MIRROR

This full-length mirror is designed to stand on the floor or be hung up out of the way — on a wall.

There were a couple things that made building this full-length mirror enjoyable. One was building a segmented arch. The other was the straightforward construction. Together they provided just the right blend of woodworking techniques to keep things interesting.

Now, don't think the segmented arch was added to this project as a "gimmick" to spice-up the mirror design. It's there to solve two basic problems with cutting arches out of solid pieces of stock. One is how to avoid weak cross grain and the other is how to avoid wasting a lot of wood.

Not that using segments is anything new. Technically, every time you build a picture frame or a frame and panel door you're working with segments. But an arch is different. The segment angles aren't 45°. Plus, the segments are joined with splines, see detail 'a' of drawing on the next page. And once the segments are glued together, you still have to cut the arch free. For more on making segmented arches, refer to page 32.

To compliment the clean, simple lines of the arch, the mirror and stand frames are put together using basic stile and rail construction. Then they're joined with simple half lap joints, see detail 'b' of drawing on the next page. What I like about using half laps is they're easy to set up on the table saw, yet they provide a relatively strong joint once they're glued together.

MATERIALS

A	Segments (3)	¾ x 4 - 10¼	**F**	Stand Stiles (2)	¾ x 1½ - 49
B	Mirror Stiles (2)	¾ x 2 - 52	**G**	Bottom Rail (1)	¾ x 3½ - 15½
C	Mirror Rail (1)	¾ x 4 - 16	**H**	Middle Rail (1)	¾ x 1½ - 15½
D	Backer (1)	⅛ hrdbd. - 12½ x 60	**I**	Bracket (1)	¾ x 2½ - 15½
E	Molding Strips (3)	⅛ x ¼ - 48	**J**	Cleat (1)	¾ x 2½ - 8

CUTTING DIAGRAM

¾"x 4½"x 96" (3.0 Bd. Ft.)

¾"x 5"x 96" (3.4 Bd. Ft.)

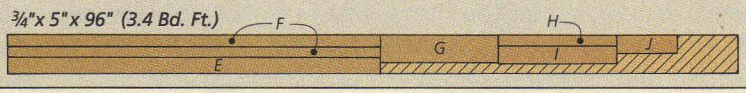

SUPPLIES

- (1 pair) 1¼" x 1½" Hinges
- (3) Brass Screw Eyes
- (4) #8 x 1" Fh Woodscrews
- (1) 2/0 Brass Chain 30" long

BUILDING THE ARCH

Because the size of the arch (width) will determine the overall width of the mirror frame, I started work on the arch segments first.

CUTTING SEGMENTS. Building the arch for this mirror requires using three **segments (A)**, see Fig. 1. These segments are cut to a finished size of 4" x 10¼". That way when they're glued together they create enough stock to cut out an arch with a 16" span (the outside dimensions of the mirror frame). But to make sure these pieces fit together tightly, you need two things: segments all the exact same length with ends cut at exactly the same angle, see Fig. 1.

MITER GAUGE. I worked on the angle first. Since I didn't trust the scale on my miter gauge to be entirely accurate, a good protractor came in handy when setting the angle to 60°.

Next, I clamped an auxiliary board to the miter gauge with a stop block clamped to one end, see Fig. 2. Using a stop block is the key to making this whole setup work. It guarantees that the pieces come out the same length.

I also find that it helps to cut an angle on the stop block that matches the angle of the segments, see Fig. 2a. That way the stop block fits like a glove around the end of the segment so it doesn't shift during the cut.

Note: Hang on to the scrap pieces cut off the ends of the segments. They'll become part of a shop-built jig you can use later.

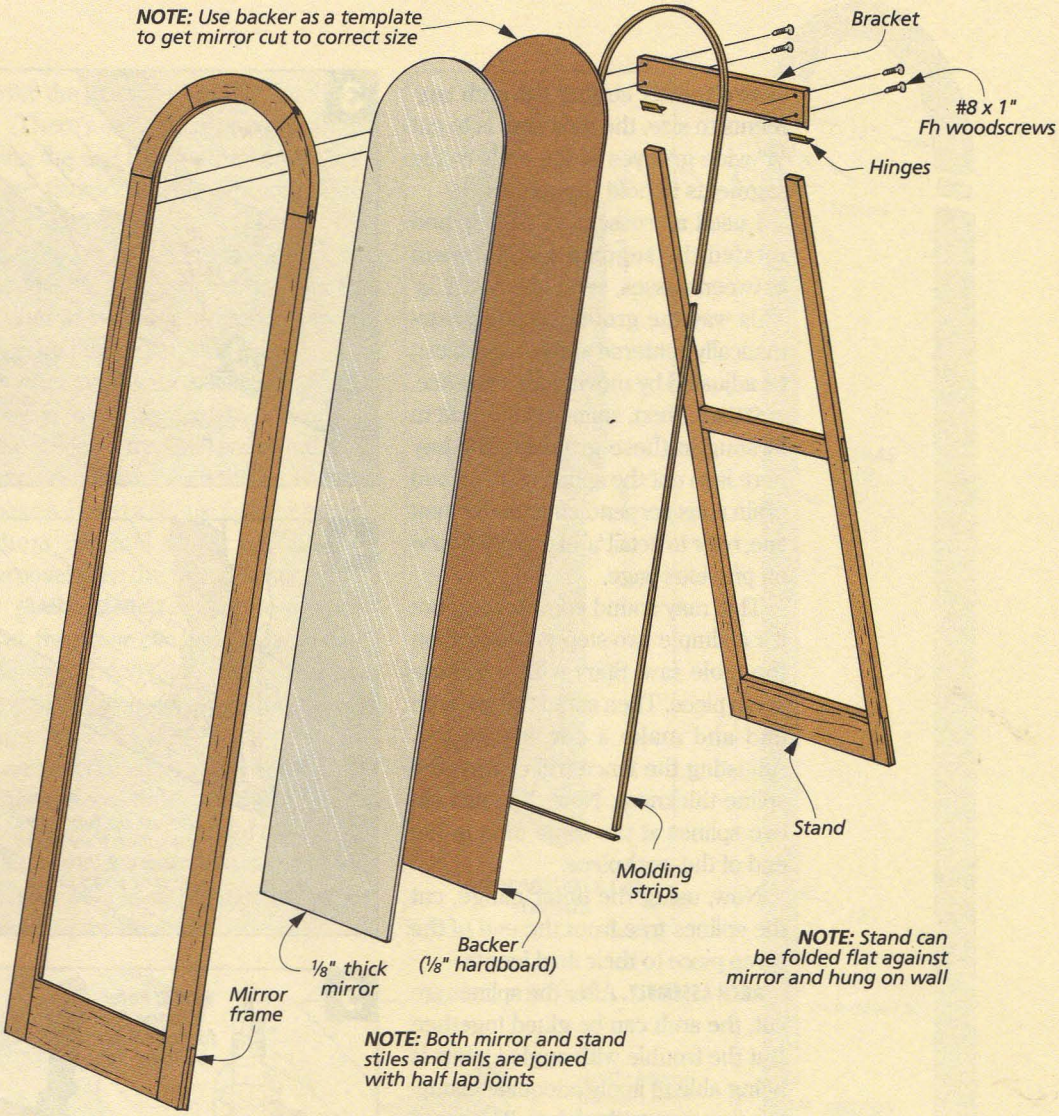

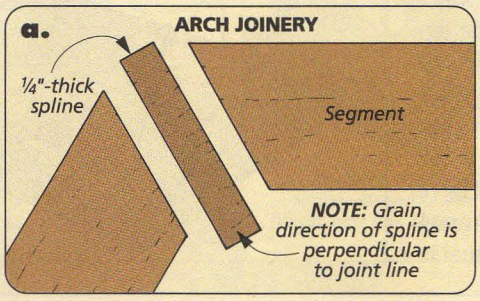

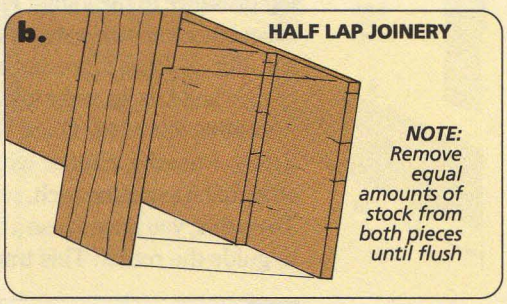

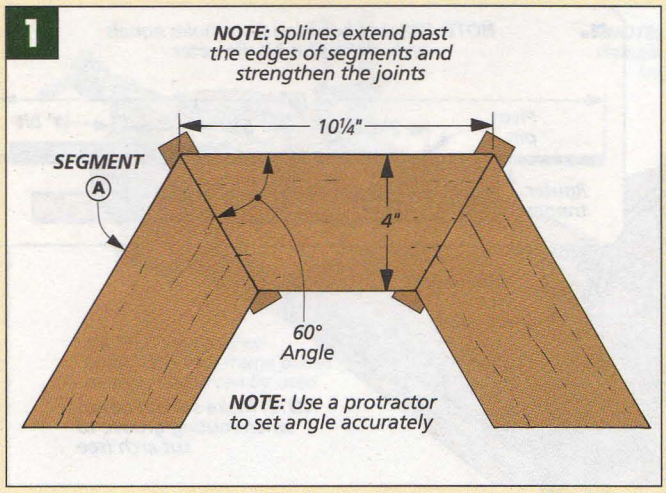

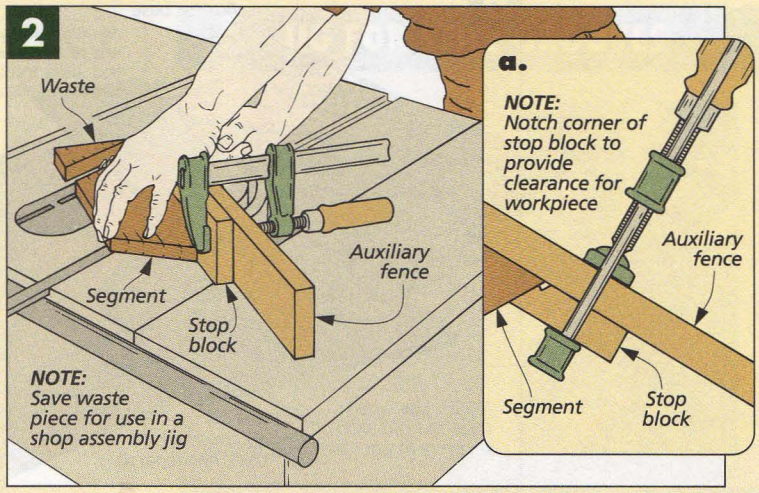

GROOVES. After cutting the arch segments to size, the next step is to cut ¼"-wide grooves in the ends of the segments to hold the splines.

I used a crosscut saw blade and rotated the segments end-for-end between passes, see Figs. 3 and 3a. This way the groove ends up automatically centered and the width can be adjusted by moving the rip fence.

SPLINES. Next, splines can be cut to fit snug in these grooves. The key here is to cut the spline so the wood grain runs perpendicular to the joint line, refer to detail 'a' of exploded view on previous page.

This may sound complicated, but it's a simple two-step procedure on the table saw. Start with a 5"-wide scrap piece. Then stand the piece on end and make a cut, see Fig. 4. Adjusting the fence will change the spline thickness. Note: You can cut two splines at the same time in the end of the workpiece.

Now, using the miter gauge, cut the splines free from the end of the scrap piece to their final length.

ARCH ASSEMBLY. After the splines are cut, the arch can be glued together. But the trouble with angled joints is being able to apply adequate clamping pressure to the joints. The way I solved this was with a shop-made jig, see Fig. 5. (For more on building arches and this jig, refer to page 32.)

ROUTING THE ARCH. Once the glue dries, I used a router with a ¼" straight bit to cut the arch, see Fig. 6. To do that, you have to use a trammel to guide the router. This trammel is

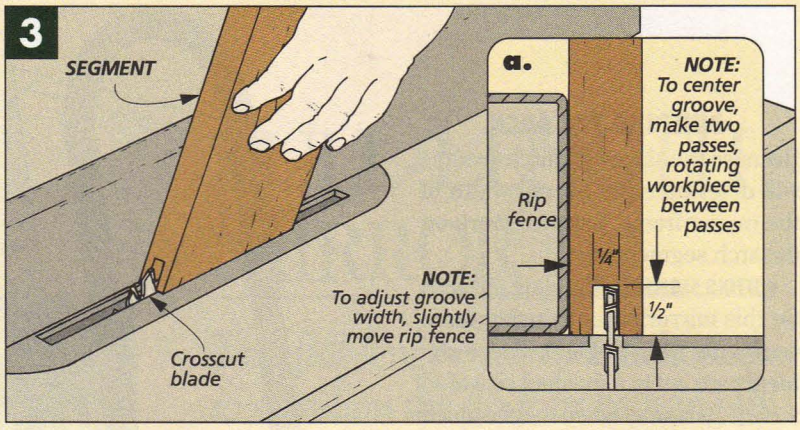

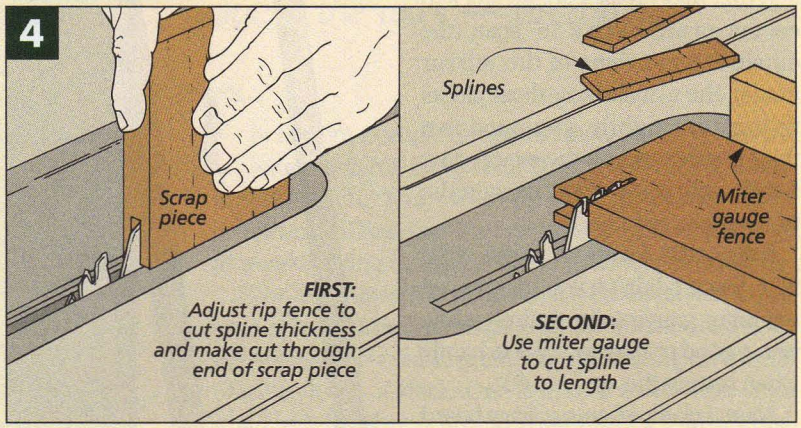

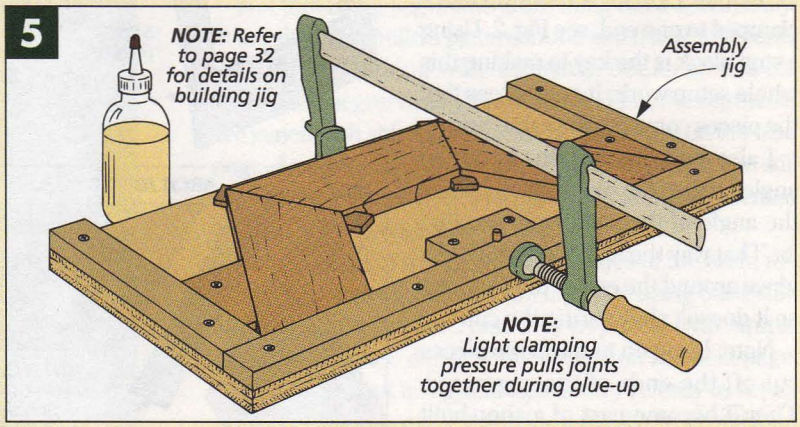

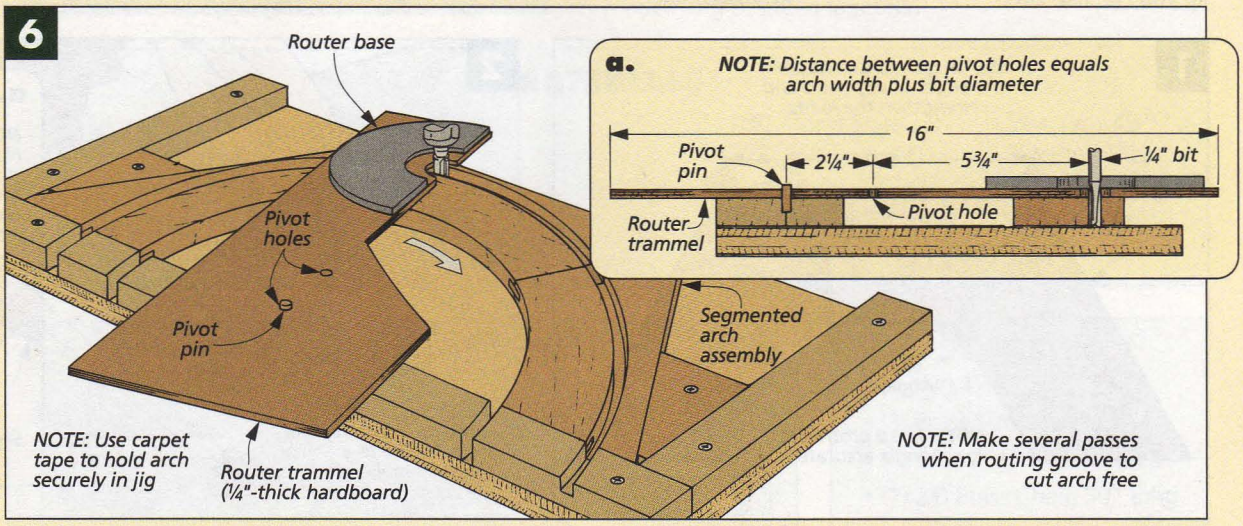

a ¼"-thick piece of hardboard with two pivot holes at one end, see Fig. 6a.

The pivot holes are key to routing the arch. That's because the distance between them plus the width of your router bit determines the width of your arch. In my case the holes were spaced 2¼" apart.

MIRROR FRAME

With the arch complete, the rest of the mirror frame can be built.

STILES & RAILS. This frame consists of two 2"-wide **stiles (B)** held together by a 4"-wide **bottom rail (C)**, see exploded view at right.

The stiles and rail are joined together with a half lap joint. This joint is easy to cut yet it's relatively strong when glued together, see Fig. 7 and detail 'a' of exploded view.

The trick to cutting half laps is getting each piece cut exactly half way through. So I start with the blade set shallow and sneak up on the final thickness. It's easy to check if the two faces are flush. Just run your finger over the joint line see Fig. 7a.

There's one critical dimension cutting the half laps on the bottom rail. The distance between the shoulders on the joints has to be equal to the distance between the inside edges of the arch (12"), see drawing at right. Otherwise the frame and arch won't line up during assembly.

After cutting the half laps, the next step is to cut a groove in the ends of the stiles for a spline, see detail 'a' of exploded view. Since these are long pieces, I used a simple jig to help hold them vertical while cutting the grooves, see the box at lower right.

FRAME ASSEMBLY. With the grooves cut, the frame can be glued together. Since you don't need a lot of clamping pressure, you can clamp a piece of scrap across the frame and then use a short clamp to pull the arch and frame pieces tight, see Fig. 8.

Finally, trim the ends of the splines flush with the frame. I used a chisel to pare away most of the wood before sanding it smooth.

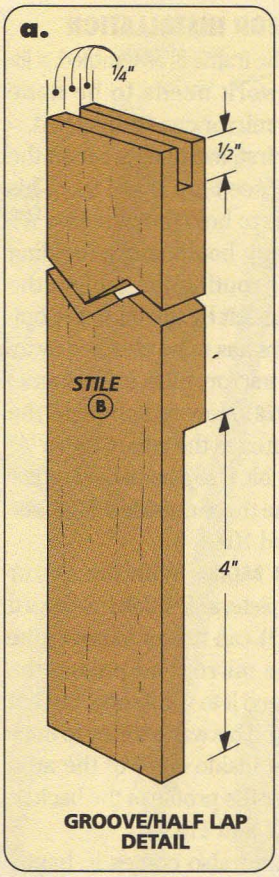

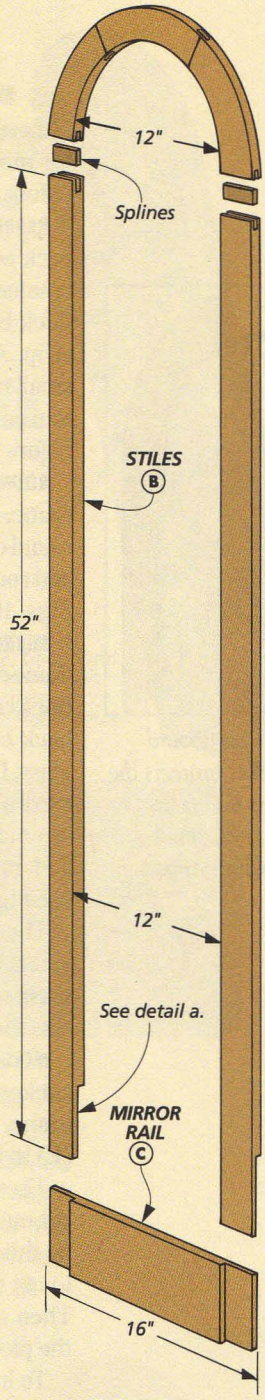

NOTE: Mirror frame is held together with half lap joints at the bottom and splined joints on top.

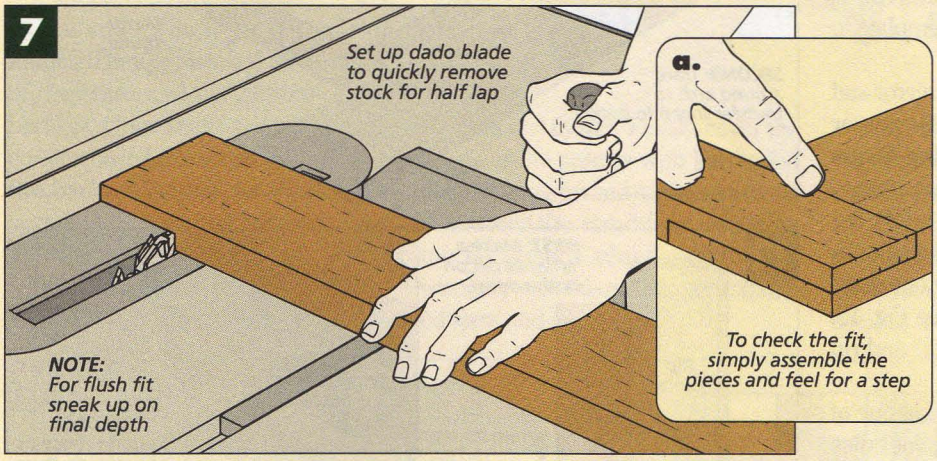

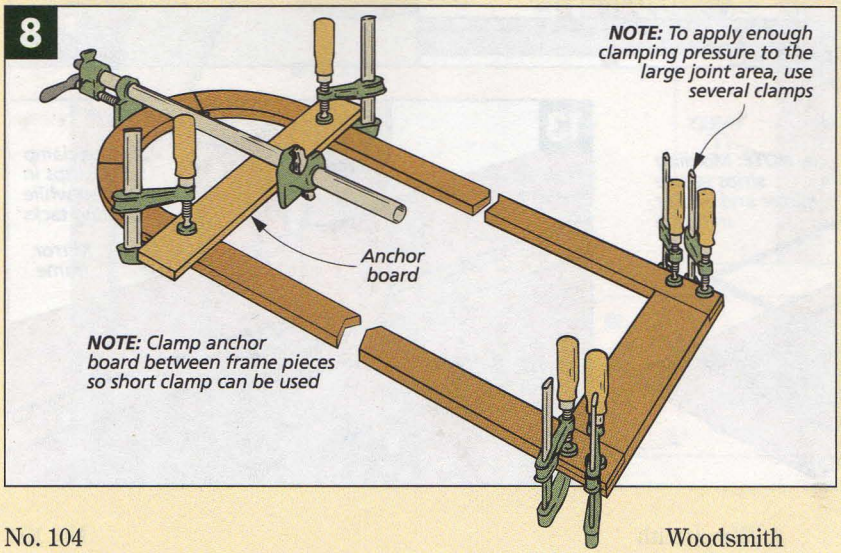

JIG FOR STILE GROOVES

I ran into a problem cutting the groove in the ends of the stiles. The pieces were too tall to safely feed past the blade. So I made a simple jig from a piece of hardboard glued to a piece of scrap. It keeps the stile in a vertical position and tight against the rip fence while you make the cut.

MIRROR INSTALLATION

Although the frame is assembled, a little more work needs to be done before the mirror can be installed.

RABBET. First, a rabbet is cut on the back edge, see Figs. 9 and 9a. This creates a lip to hold the mirror, a 1/8"-thick backing board, and a molding strip. After routing the rabbet, the small radius left by the bit in the bottom corners has to be chiseled away before the mirror will fit in the frame.

ROUNDOVER. Now to complete the frame, I softened the edges with a 1/8" round-over bit. Use a hand-held router and rout the three outside edges, see Figs. 10 and 10a.

MIRROR & BACKER. With the mirror frame complete, a 1/8"-thick hardboard **backer (D)** can be cut to cover the back of the mirror and protect the glass. I ripped it to width first, but left it extra long. This way it's easy to trace around the inside edge of the arch and transfer the profile to the backer, see Figs. 11 and 11a.

The backer also comes in handy when it's time to cut the mirror. A glass shop can use it as a template to size the mirror exactly.

MOLDING STRIPS. With the mirror and backer board installed in the mirror frame, I used small **molding strips (E)** to hold them securely in place.

These small strips (1/8" x 1/4") are cut out of a larger piece of stock. To do this, first make a cut on one edge to cut the 1/8" thickness, see Fig. 12. Then set the rip fence to 1/4" and rip the pieces free.

To install the strips, start at one of the bottom corners. Drill pilot holes first before tacking the strips in place, see Fig. 13 and drawing below.

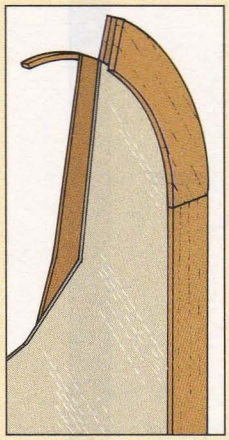

▲ *The hardboard backer protects the glass and is held in place by small molding strips.*

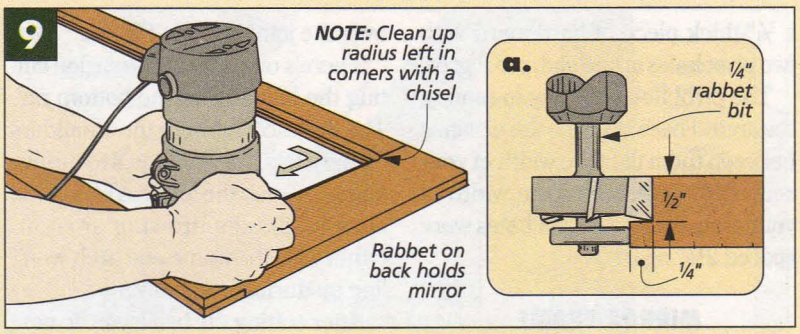

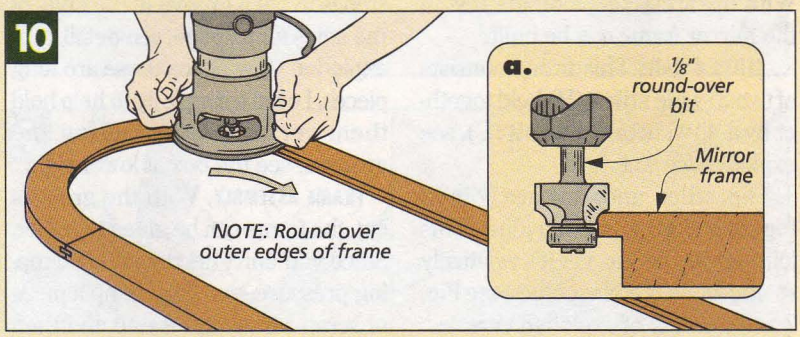

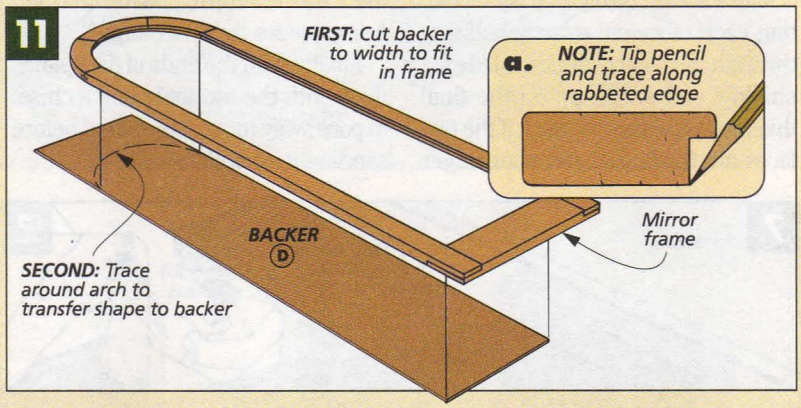

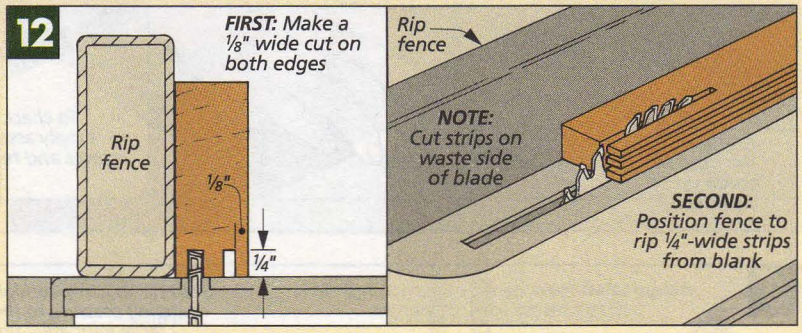

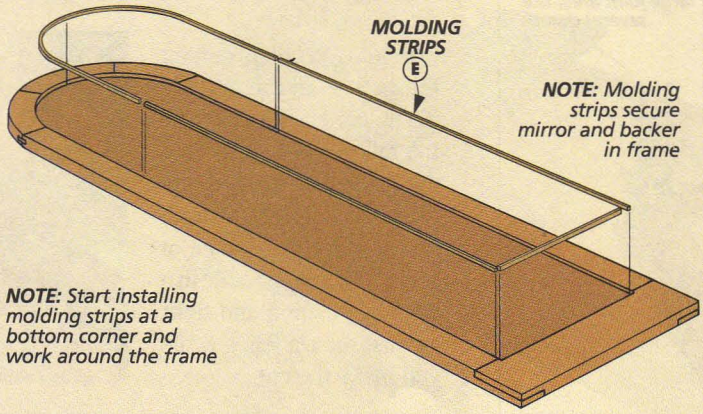

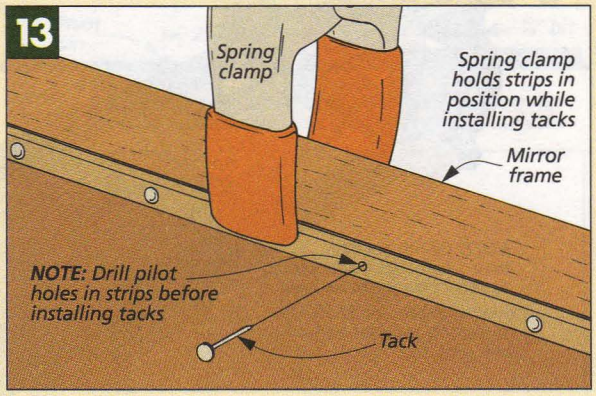

STAND

With the mirror installed, work can begin on the stand. The stand consists of two stiles and rails attached to a bracket, see drawing at right.

STILES & RAILS. Building the frame for the stand is a lot like making the mirror frame. Except you have an extra rail that's added for strength. To make the stand, first cut the **stiles (F)** to finished size. Then the rails. The rails are the same length (15½"), but the **bottom rail (G)** is 3½" wide while the **middle rail (H)** is 1½" wide.

Here again, I used half laps to join the stiles and rails. Then once you have a good fit, glue and clamp the frame pieces together.

BRACKET. The last piece needed for the stand is a bracket. It's used to attach the stand to the mirror frame.

What's a little unusual about the **bracket (I)** is the bottom edge. It's ripped at 30°, see detail 'a' of exploded view. This allows an optional angled cleat to be used so you can hang the mirror up.

INSTALLATION. To attach the bracket to the stiles you'll need a pair of hinges. They're installed on the ends of the stiles and the bottom of the bracket. Once that's complete, four counterbored holes can be drilled in the back of the bracket before it's screwed to the mirror frame, see detail 'b' of exploded view.

Just align the top edge of the bracket with the joint line between the mirror arch and frame. Finally, cover the heads of the screws with hardwood plugs. Then trim and sand them flush.

To keep the stand from swinging too far open, I added a chain and screw eyes to the mirror, see exploded view and detail 'c'.

CLEAT. If you plan on hanging this mirror, you'll need an optional angled **cleat (J)**, see Figs. 14 and 14a. Simply rip a 30° angle on one edge and attach the cleat (angled edge up) to a wall. Then hang the mirror over the cleat, see Fig. 14b and photo below. W

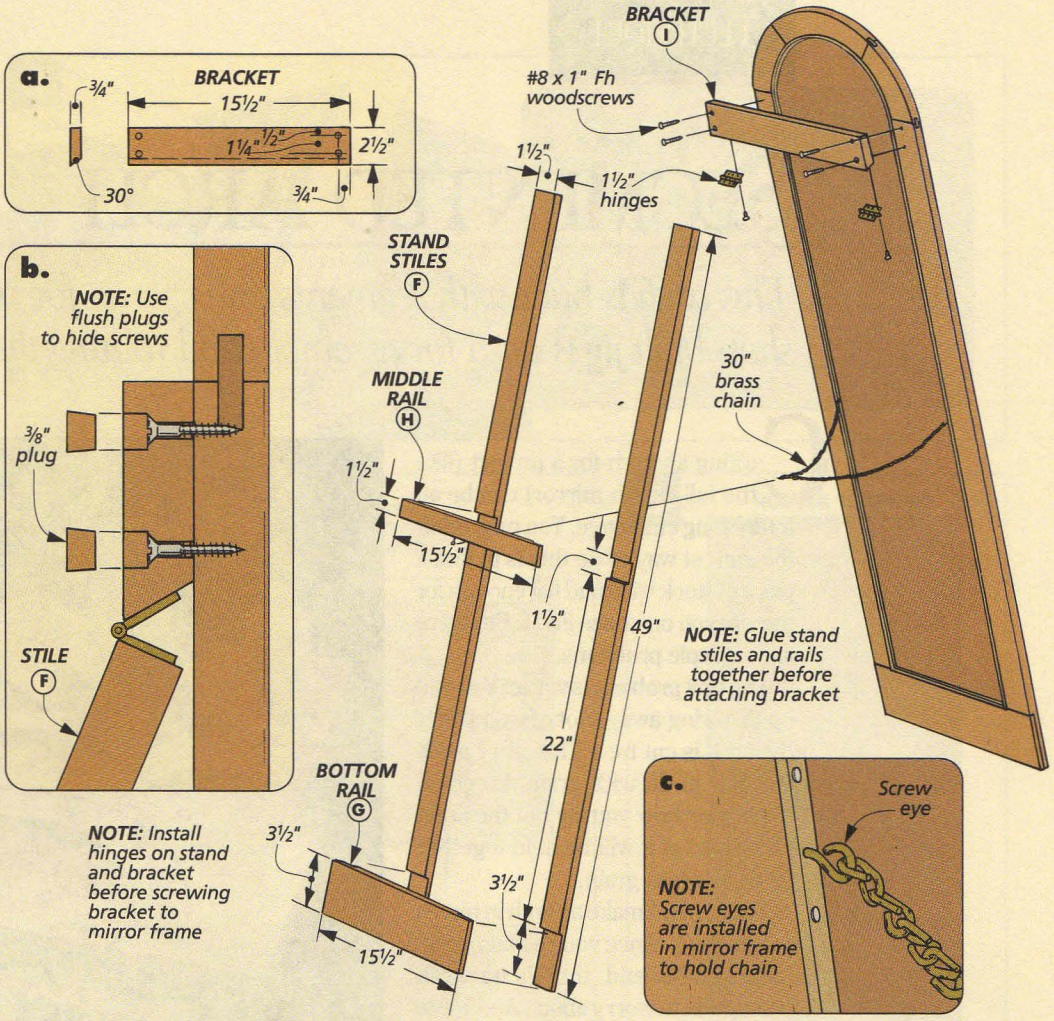

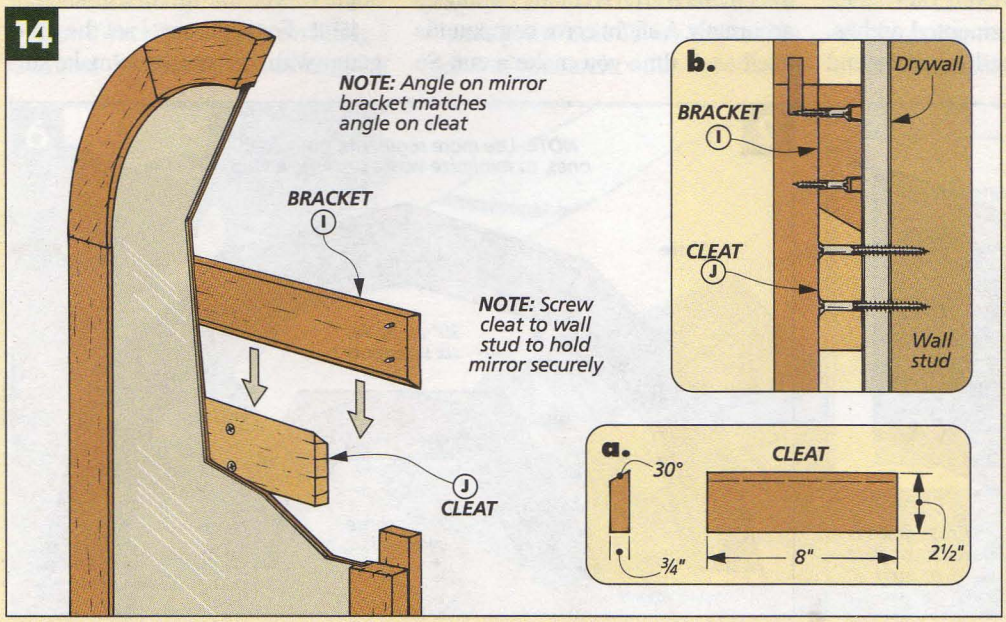

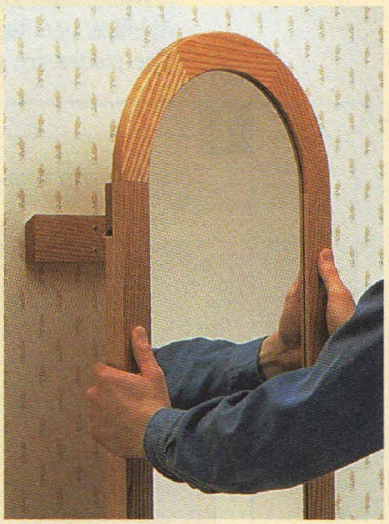

▲ *With the cleat securely screwed to a wall stud, close the stand and hang the mirror over the cleat.*

SEGMENTED ARCH

This arch is built with segments and splines for strength. Then a simple shop-built jig is used for assembly and routing the arch.

Cutting an arch for a project (like the full-length mirror) can be an interesting challenge. You may think the easiest way to do this is to find a piece of stock wide and flat enough for the size you need, see Fig. 1. But there are a couple problems.

The first problem is waste. You end up throwing away a lot of wood after the arch is cut free. The other problem has to do with grain direction. No matter how you lay out the arch, some part of it will be held together by weak cross grain.

That's why I make an arch in pieces (segments). Since you're gluing segments end-to-end, there's no weak cross grain to worry about. And waste is kept to a minimum.

NUMBER OF PIECES. So how many segments do you need? Well it depends on the size of the arch. Three or four are enough for most projects. But the bigger the arch the more segments that are needed if you plan on keeping waste to a minimum, see Fig. 2.

WEAK POINT. However, there's an Achilles' heel to segmented arches. The pieces are glued together end grain to end grain — a pretty weak joint. Fortunately, there's an easy solution to this problem. I just install a spline to strengthen the joint.

CUTTING ANGLES. The key to making a segmented arch is cutting the angles accurately. A slight error compounds itself each time you make a cut. So what angle do I use? It depends on the number of pieces used in the arch, see Fig. 2. To find the angle, divide the number of segments into 180° (half of a circle). On the mirror arch the angle was 60° for three segments.

SETUP. For accuracy, I set the miter gauge with a protractor to make sure

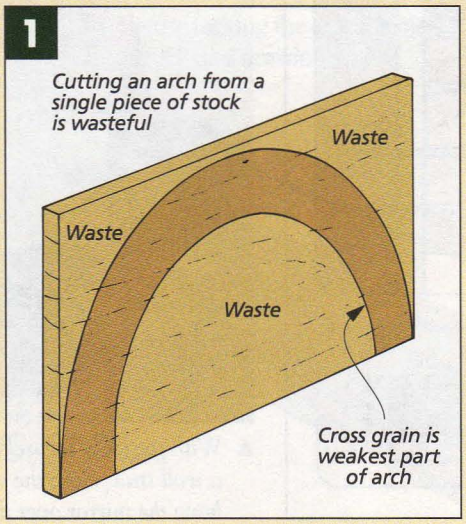

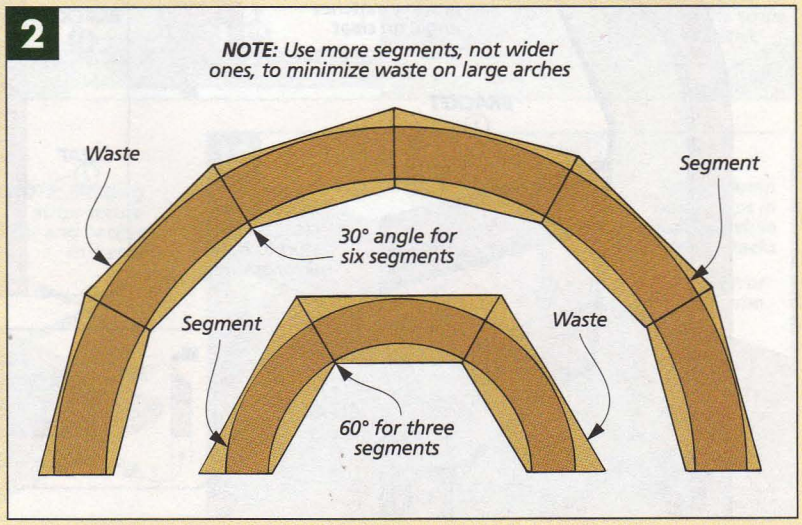

it's right on. I also add a stop block to an auxiliary miter gauge fence. This way, all the pieces will come out the same length, see Figs. 3 and 3a. Note: Keep a couple of the waste pieces from the segment ends. You can use them later in an assembly jig.

SLOTS & SPLINES. Once the segments are cut to size, the next step is cutting a slot in the end of each piece to hold a spline. To center the slot, I flip the segments between passes on the table saw. (For the mirror the slot was ¼"-wide x ½"-deep.) Now a spline can be cut to fit snug in the slot.

The key to cutting splines is making sure the grain direction of the spline runs perpendicular to the joint line. To do this, I cut them out of the end of a scrap piece of hardwood, for more on this refer to page 28.

ASSEMBLY. With the splines cut, the arch can be glued together. But trying to glue and clamp these angled pieces together is like trying to read a doctor's handwriting on a prescription — nearly impossible. So I use a shop-made jig, see Fig. 4.

This is a multi-purpose jig. It's an assembly jig where a single clamp on a three segment arch pulls the segments together. And once the pieces have been glued-up, it also holds them so a router can cut out the arch.

ROUTING THE ARCH. To cut the arch, I used a router and a ¼" straight bit, refer to Figs. 6 and 6a. But first you'll need to attach a trammel to the router to guide it through the arc.

There's really nothing to making a trammel. It's just a piece of ¼"-thick hardboard wide enough for your router base and long enough for the longest radius, see Fig. 5. Plus a couple pivot holes are drilled at one end.

One pivot hole is for the inside radius of your arch, while the other is for the outside radius. One way to check if the holes are in the correct location is to measure the distance between them. It should equal the width of your arch plus the diameter of the router bit. W

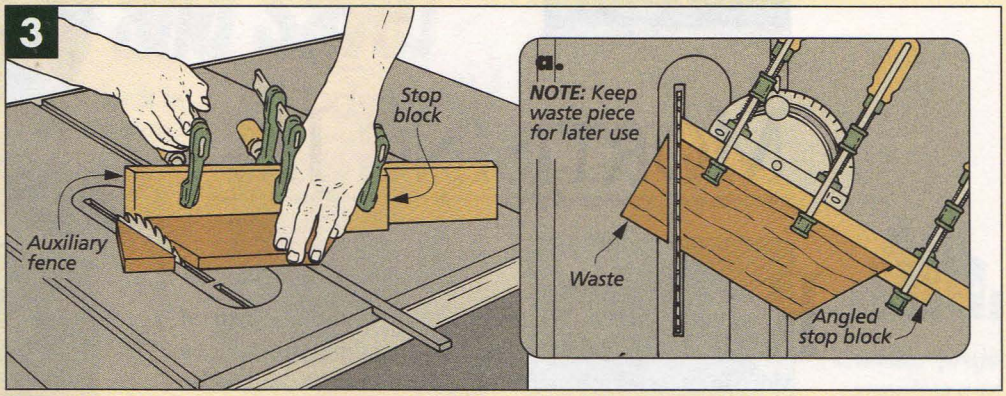

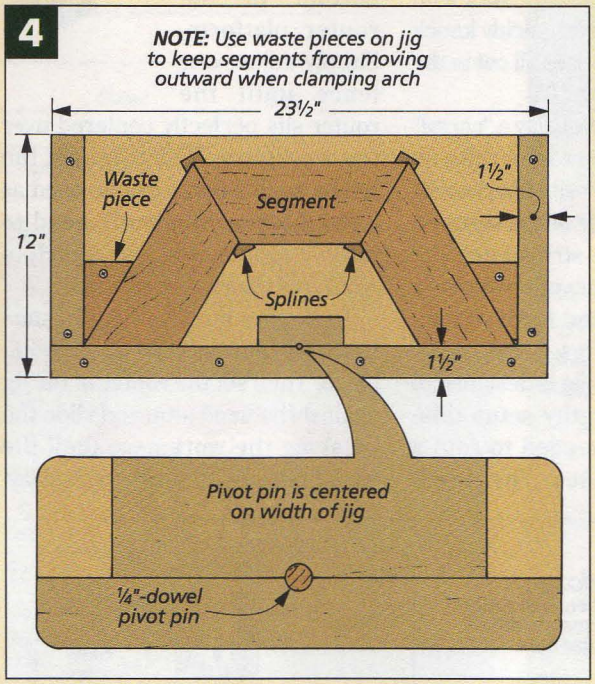

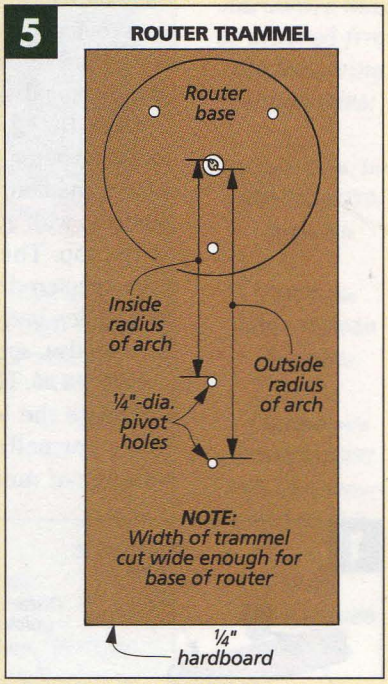

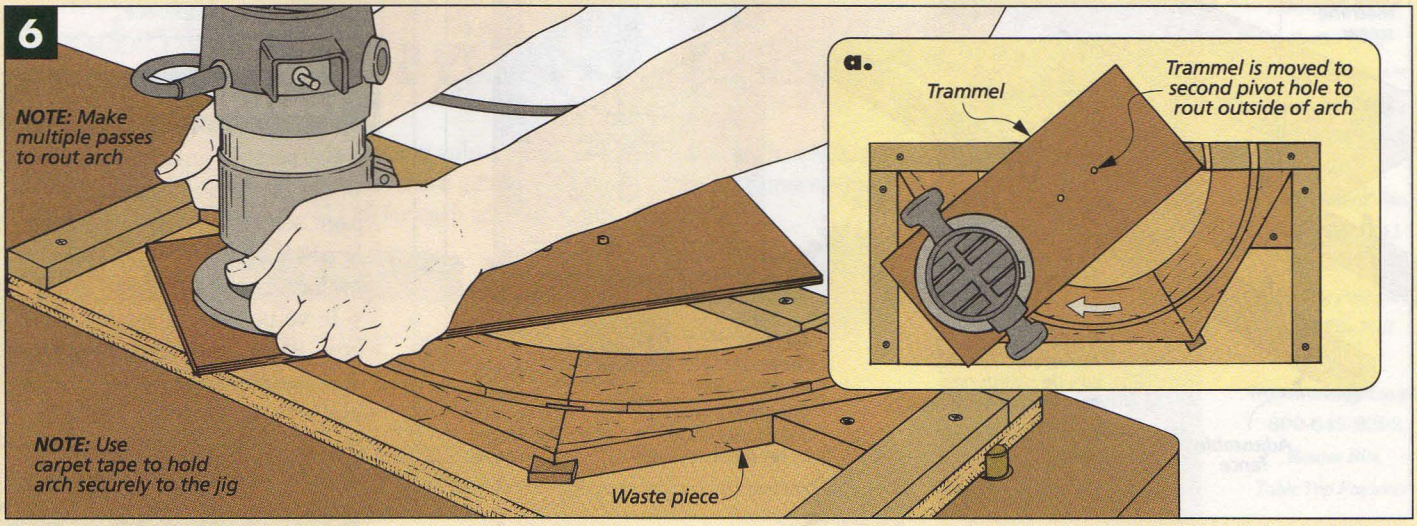

MORTISING JIG

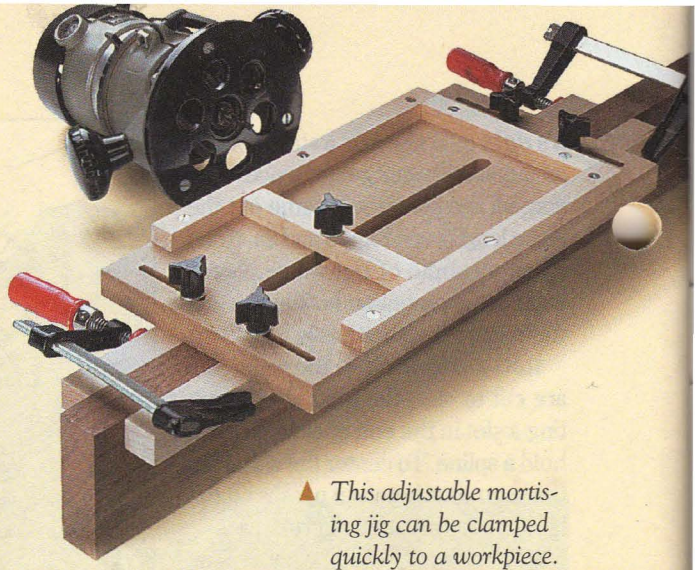

▲ *This adjustable mortising jig can be clamped quickly to a workpiece.*

Recently, **Mike Wagner** from Appleton, Wisconsin, sent in a video to us showing a mortising jig he had built. It's designed to work with your router so you can quickly knock out a bunch of mortises all cut to the same size and shape.

DESIGN. His jig is basically a "corral" for your router. The router rides on a MDF (medium density fiberboard) platform with guide strips screwed to the top. These strips keep the router centered over your workpiece as it slides back and forth routing the mortise, see Figs. 1 and 1a.

USING THE JIG. This jig is designed to eliminate the lengthy setup time that's normally needed to rout a number of mortises. The way it works is a pair of adjustable fences are attached to the bottom of the router platform. Simply adjust one fence until the router sits perfectly centered over the workpiece. Then tighten the knobs so this fence can be used as a fixed fence. You won't need to move it again unless you switch to a different thickness of stock

To set the mortise length, start by marking the location on the workpiece. Then set the router in the jig against the fixed stop and slide the jig along the workpiece until the router bit lines up with your first layout line, see Fig. 2. Now clamp the jig in place and set the adjustable stop, see photo above. To do this, move the router until the bit is aligned with the second layout line and lock the stop in place.

Once the length is set, you only need to align the jig with a single layout line for each mortise.

Shop Note: I like to use an upcut spiral router bit to rout mortises. It pulls the chips out of the hole. W

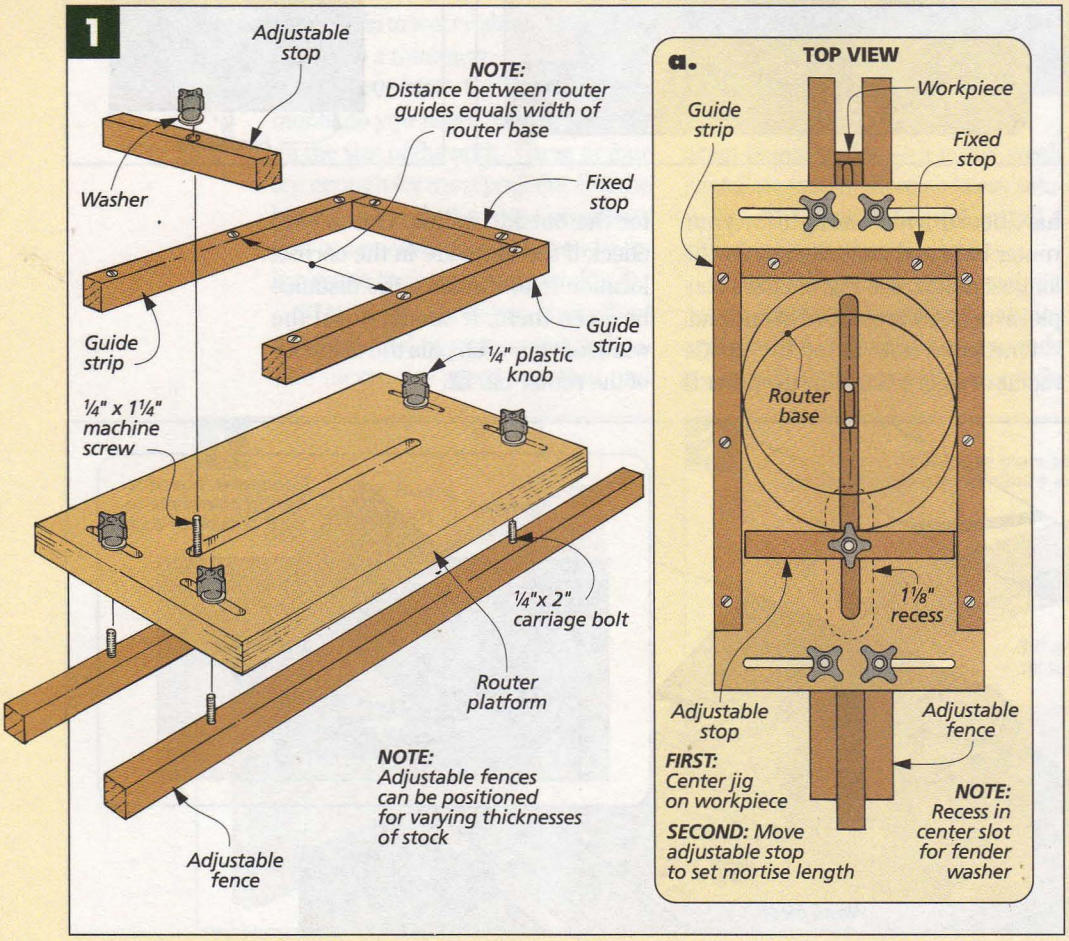

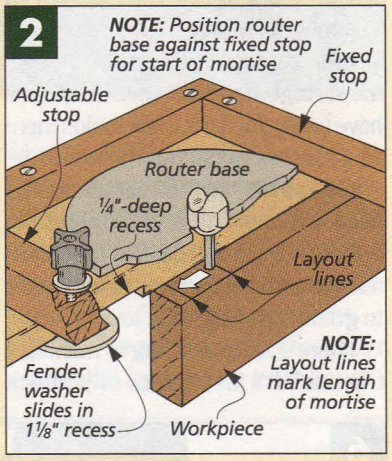

FEATURE YOUR JIG

If you've built an *original* jig and would like to see it featured on this page, send your idea to *Woodsmith*, Reader's Jig, 2200 Grand Ave., Des Moines, IA 50312.

If we publish it, we will send you $100 and a full set of *Woodsmith* back issues, with binders. Include a sketch (or photo), explain how it's used, and include a daytime phone number.

SOURCES

Woodsmith Project Supplies offers hardware kits and supplies for some of the projects shown in this issue. Supplies for these projects are also available at your local hardware store or through the mail order sources at right.

FULL-LENGTH MIRROR

To build the full-length mirror shown on page 26, you'll need some hinges, brass chain, and three screw eyes. A complete hardware kit (not including the mirror) is currently available from *Woodsmith Project Supplies*.

W104-7104-100 Mirror Hardware Kit $9.95

This or similar hardware is available from local hardware stores as well as the source listed at right.

RABBET BIT. Also, to rout the rabbet that holds the mirror, I used a ¼" rabbet bit. If you don't have a ¼" bit, another option is to replace the bearing on a ½" or ⅜" rabbet bit with a larger one, see the router bit sources listed at right.

SOFA TABLE

The sofa table on page 6 requires little hardware. In fact, all you need are some Z-shaped table top fasteners and some screws, see sources listed at right.

STRAIGHT BIT. To rout the bevel on the sofa table, I used a ⅜"-dia. straight bit. But what's important is the length of the flutes, not the diameter of the bit. The flutes must be longer than the length of the bevel (at least 1¼").

MAGAZINE BOXES

The only hardware needed for the magazine boxes are the brass card file pulls on the front, see sources at right. Note: You'll have to switch to shorter screws to accommodate the ¼"-thick panels used in the boxes.

INDEX

We've recently updated our index of woodworking projects and information to include issues 1-100 of *Woodsmith*.

W104-8001-500 *Woodsmith Index* $4.95

FINISHING SUPPLIES

Here are a few products we use in our shop.

WAX. I like Liberon's Professionals or Black Bison paste wax. The Professionals gives a high sheen. And Black Bison's colored waxes hide scratches.

Liberon Professionals Paste Wax
W104-4001-200 ..... $13.95

Liberon Black Bison Paste Wax
W104-4001-201 (Clear) $11.95
W104-4001-202 (Medium Oak) $11.95
W104-4001-203 (Walnut) $11.95

Liberon 0000 Steel Wool (to apply wax)
W104-4012-145 ..... $6.95

FINISHES. We also use General Finishes' products, see inset photo above. Sealacell (a sealer) goes on first. Royal Finish or Arm-R-Seal are final top coats.

Sealacell
W104-4003-601 (Quart) $11.95

Royal Finish (Satin)
W104-4003-602 (Quart) $11.95

Arm-R-Seal (Satin)
W104-4003-620 (Quart) $11.95

MAIL ORDER SOURCES

Similar project supplies and hardware may be ordered from the following companies:

Cascade Tools, Inc.
800-235-0272
Router Bits

CMT Tools
800-531-5559
Router Bits

Constantine's
800-223-8087
Table Top Fasteners, Card File Pull

MLCS
800-533-9298
Router Bits

Woodcraft
800-225-1153
Router Bits, Table Top Fasteners, Card File Pull

Woodsmith Store
800-835-5084
Router Bits, Table Top Fasteners, Card File Pull, Mirror Hardware

Woodworkers' Store
800-279-4441
Router Bits, Table Top Fasteners, Card File Pull

Woodworker's Supply
800-645-9292
Router Bits, Table Top Fasteners

WOODSMITH PROJECT SUPPLIES

To order a hardware kit from *Woodsmith Project Supplies* or for a copy of our *WoodsmithShop* catalog, use our Toll Free order line. It's open Monday through Friday, from 7 AM to 7 PM Central Time.

Before calling, please have your VISA, MasterCard, or Discover Card ready.

If you would like to mail your order in, call the number below for more information concerning shipping charges as well as any applicable sales tax.

1-800-444-7527

Note: Prices subject to change after June 1996

WoodNet™ COMPUTER BULLETIN BOARD FOR WOODWORKERS

- More than 40 Project Plans to Download
- Step-by-Step "How-to" Articles
- Woodworking & Finishing Forums
- Back Issue Indexes for *Woodsmith* & *ShopNotes*
- For PC or Mac
- Download FREE on First Call
- Join Hundreds of Members

To log on to WoodNet, set your communication program to 8 data bits, 1 stop bit, no parity, full duplex, and ANSI terminal emulation. Then call 1-515-245-9663. Questions? Call us at: 515-282-7000 x2173, M-F 9-5.

FINAL DETAILS

▲ *A router and trammel make short work of cutting a perfect arch from glued-up segments. Building segmented arches begins on page 32.*

▲ *These stacking boxes are held together with simple box joints. And to make both the boxes and the lid more striking, we used contrasting hardwoods – maple and cherry. Plans begin on page 14.*

▲ *To strengthen the arched top on our full-length mirror, we reinforced the joints with simple splines. Just follow the step-by-step plans on page 26.*

▲ *A quick and easy box joint project, these planters feature removable liners. Instructions begin on page 20.*